Instructions – Parts List

King®, Bulldog®, and Senator® Pumps, with Priming Piston and Severe–Duty Displacement Pump

Power–Flo® Pumps

307982H

15:1 Ratio Senator Pump

10.5 MPa, 105 bar (1500 psi) Maximum Working Pressure

Model 222518, Series A
200 liter (55 gallon) drum size, Standard Air Motor

25:1 Ratio Bulldog Pumps

17.5 MPa, 175 bar (2500 psi) Maximum Working Pressure

Model 222527, Series A
200 liter (55 gallon) drum size, Standard Air Motor

Model 222528, Series A
19 liter (5 gallon) ram size, Standard Air Motor

Model 223985, Series A
200 liter (55 gallon) drum size, Quiet Air Motor

Model 223986, Series A
19 liter (5 gallon) ram size, Quiet Air Motor

55:1 Ratio King Pumps

34.5 MPa, 345 bar (5000 psi) Maximum Working Pressure

Model 222545, Series B
200 liter (55 gallon) drum size, Standard Air Motor

Model 223992, Series B
200 liter (55 gallon) drum size, Quiet Air Motor

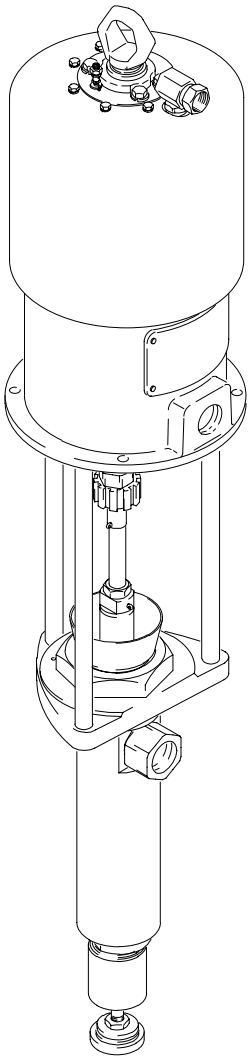

TI1597A

Read warnings and instructions.
See page 2 for table of contents.

PROVEN QUALITY. LEADING TECHNOLOGY.

GRACO INC. P.O. BOX 1441 MINNEAPOLIS, MN 55440–1441
Copyright 1989, Graco Inc. is registered to I.S. EN ISO 9001

Table of Contents

Warnings 2
Installation 7
Operation 8
Troubleshooting 12
Displacement Pump Service 14
Parts Lists and Drawings 18
Technical Data and Performance Charts 22
15:1 Ratio Senator Pump 22
25:1 Ratio Bulldog Pump 23
55:1 Ratio King Pumps 24
Dimensions 25
Air Motor Mounting Layout 25
Graco Warranty 26
Graco Information 26

Symbols

Warning Symbol

⚠ WARNING

This symbol alerts you to the possibility of serious injury or death if you do not follow the instructions.

Caution Symbol

⚠ CAUTION

This symbol alerts you to the possibility of damage to or destruction of equipment if you do not follow the instructions.

⚠ WARNING

INSTRUCTIONS

EQUIPMENT MISUSE HAZARD

Equipment misuse can cause the equipment to rupture or malfunction and result in serious injury.

- This equipment is for professional use only.
- Read all instruction manuals, tags, and labels before operating the equipment.
- Use the equipment only for its intended purpose. If you are not sure, call your Graco distributor.
- Do not alter or modify this equipment. Use genuine Graco parts and accessories.
- Check equipment daily. Repair or replace worn or damaged parts immediately.
- Do not exceed the maximum working pressure stated on the equipment or in the **Technical Data** for your equipment. Do not exceed the maximum working pressure of the lowest rated component in your system.
- Use fluids and solvents which are compatible with the equipment wetted parts. Refer to the **Technical Data** section of all equipment manuals. Read the fluid and solvent manufacturer's warnings.
- Handle hoses carefully. Do not pull on hoses to move equipment.
- Route hoses away from traffic areas, sharp edges, moving parts, and hot surfaces. Do not expose Graco hoses to temperatures above 66°C (150°F) or below –40°C (–40°F).
- Wear hearing protection when operating this equipment.
- Do not move or lift pressurized equipment.
- Comply with all applicable local, state, and national fire, electrical, and safety regulations.

⚠ WARNING

INJECTION HAZARD

Spray from the valve, leaks or ruptured components can inject fluid into your body and cause extremely serious injury, including the need for amputation. Fluid splashed in the eyes or on the skin can also cause serious injury.

- Fluid injected into the skin is a serious injury. The injury may look like just a cut, but it is a serious injury. Get immediate medical attention.
- Do not point the valve at anyone or at any part of the body.
- Do not put your hand or fingers over the valve tip.
- Do not stop or deflect leaks with your hand, body, glove or rag.
- Do not “blow back” fluid; this is not an air spray system.
- Always have the tip guard and the trigger guard on the valve when spraying.
- Be sure the valve trigger safety operates before dispensing.
- Lock the valve trigger safety when you stop dispensing.
- Follow the **Pressure Relief Procedure** on page 8 if the spray tip clogs and before cleaning, checking or servicing the equipment.
- Tighten all fluid connections before operating the equipment.
- Check the hoses, tubes, and couplings daily. Replace worn, damaged, or loose parts immediately. Permanently coupled hoses cannot be repaired; replace the entire hose.

MOVING PARTS HAZARD

Moving parts, such as the pump’s priming piston, can pinch or amputate your fingers.

- Keep clear of all moving parts when starting or operating the pump.
- Keep hands and fingers away from the priming piston during operation and whenever the pump is charged with air.
- Before checking or servicing the equipment, follow the **Pressure Relief Procedure** on page 8 to prevent the equipment from starting unexpectedly.

⚠ WARNING

FIRE AND EXPLOSION HAZARD

Improper grounding, poor ventilation, open flames or sparks can cause a hazardous condition and result in a fire or explosion and serious injury.

- Ground the equipment and the object being sprayed. Refer to **Grounding** on page 6.
- If there is any static sparking or you feel an electric shock while using this equipment, **stop spraying immediately.** Do not use the equipment until you identify and correct the problem.
- Provide fresh air ventilation to avoid the buildup of flammable fumes from solvents or the fluid being sprayed.
- Keep the spray area free of debris, including solvent, rags, and gasoline.
- Before operating this equipment, electrically disconnect all equipment in the spray area.
- Before operating this equipment, extinguish all open flames or pilot lights in the spray area.
- Do not smoke in the spray area.
- Do not turn on or off any light switch in the spray area while spraying or while operating if fumes are present.
- Do not operate a gasoline engine in the spray area.

TOXIC FLUID HAZARD

Hazardous fluid or toxic fumes can cause serious injury or death if splashed in the eyes or on the skin, inhaled, or swallowed.

- Know the specific hazards of the fluid you are using.
- Store hazardous fluid in an approved container. Dispose of hazardous fluid according to all local, state and national guidelines.
- Always wear protective eyewear, gloves, clothing and respirator as recommended by the fluid and solvent manufacturer.

Notes

Installation

General Information

NOTE: Reference numbers and letters in parentheses in the text refer to the callouts in the Installation and Parts drawings.

NOTE: Always use Genuine Graco Parts and Accessories, available from your Graco distributor.

Grounding

⚠ WARNING

FIRE AND EXPLOSION HAZARD
Before operating the pump, ground the system as explained below. Also read the section **FIRE AND EXPLOSION HAZARD** on page 4.

1. *King Pumps:* Use a ground wire and clamp as shown in Fig. 1. Remove the ground screw (Z) and insert through eye of ring terminal at the end of ground wire (Y). Fasten ground screw back onto pump and tighten securely. Connect the other end of the wire to a true earth ground. Order Part No. 222011 Ground Wire and Clamp.

   Bulldog Pumps: Use a ground wire and clamp as shown in Fig. 2. Loosen the grounding lug locknut (W) and washer (X). Insert one end of a 12 ga (1.5 mm^2) minimum ground wire (Y) into the slot in lug (Z) and tighten the locknut securely. Connect the other end of the wire to a true earth ground. Order Part No. 237569 Ground Wire and Clamp.

2. *Air and fluid hoses:* Use only electrically conductive hoses with a maximum of 500 ft (150 m) combined hose length to ensure grounding continuity,

3. *Air compressor:* Follow the manufacturer's recommendations.

4. *Spray gun/dispensing valve:* Grounding is obtained through connection to a properly grounded fluid hose and pump.

5. *Fluid supply container:* According to your local code

6. *Object being sprayed:* According to your local code.

7. *All solvent pails used when flushing:* According to your local code. Use only metal pails, which are conductive, placed on a grounded surface. Do not place the pail on a nonconductive surface, such as paper or cardboard, which interrupts the grounding continuity.

8. *To maintain grounding continuity when flushing or relieving pressure,* always hold a metal part of the gun/valve firmly to the side of a grounded metal pail, then trigger the gun/valve.

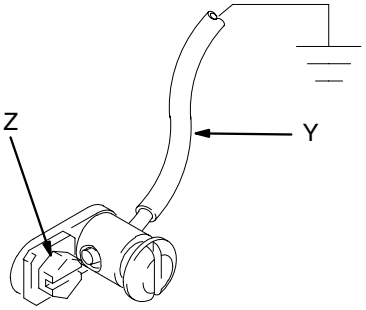

Fig. 1

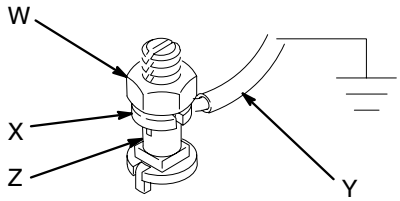

Fig. 2

Installation

Typical Installation

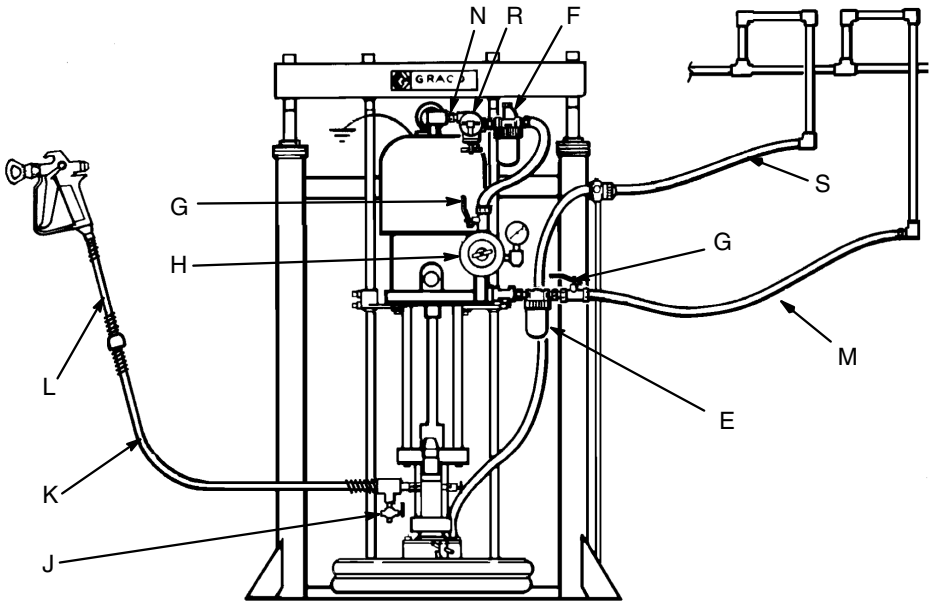

KEY

- **E** Air Line Filter
- **F** Air Line Lubricator
- **G** Bleed–Type Master Air Valve
- **H** Air Regulator and Gauge
- **J** Fluid Drain Valve
- **K** Grounded Fluid Supply Hose
- **L** Whip Hose
- **M** Air Supply Hose to Pump
- **N** 3/4 npsm(f) Air Inlet
- **R** Pump Runaway Valve
- **S** Air Supply Hose to Elevator
- **Y** Pump Ground Wire

The **Typical Installation** above is only a guide to selecting and installing accessories. For assistance in designing a system to meet your needs, contact your Graco distributor.

The **Dimensional Drawings** on page 25 provide necessary measurements for installing the pump on a custom designed mounting.

System Accessories

Refer to the **Typical Installation** drawing, above for assistance in setting up your system. If you supply your own accessories, be sure they are adequately sized to meet the system's requirements. If your pump is mounted in a ram or elevator, refer to the manual supplied with it for installation and operation instructions.

Install the accessories in the order shown in the Typical Installation drawing. The pump runaway valve (R) senses when the pump is running too fast and shuts off the air supply to the motor. The air line lubricator (F) provides automatic air motor lubrication. The bleed–type master air valve (G) relieves air trapped between it and the pump when it is closed. Be sure the valve is easily accessible from the pump. The air regulator (H) controls pump speed and outlet pressure. The air line filter (E) removes harmful dirt and moisture from the compressed air supply.

⚠ WARNING

A bleed-type master air valve (G) and a fluid drain valve (J) are required in your system. These accessories help reduce the risk of serious injury including fluid injection, splashing in the eyes or on the skin, and injury from moving parts if you are adjusting or repairing the pump.

The bleed-type master air valve relieves air trapped between this valve and the pump after the air is shut off. Trapped air can cause the pump to cycle unexpectedly . Position the valve close to the pump.

The fluid drain valve assists in relieving fluid pressure in the displacement pump, hose, and spray gun; triggering the spray gun to relieve pressure may not be sufficient.

Using a suitable adapter, connect a fluid drain valve (J) near the 1 in. npt(f) fluid outlet of the pump. Then connect a grounded fluid supply hose (K). For more flexible spray gun movement, use a shorter 13 mm (1/2 in.) ID hose (L) between the spray gun and the main hose.

Operation

Pressure Relief Procedure

⚠ WARNING

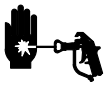

INJECTION HAZARD
Fluid under high pressure can be injected through the skin and cause serious injury. To reduce the risk of an injury from injection, splashing fluid, or moving parts, follow the **Pressure Relief Procedure** whenever you:

- are instructed to relieve the pressure,
- stop spraying/dispensing,
- check or service any of the system equipment,
- or install or clean the spray tips/nozzles.

1. Lock the gun/valve trigger safety.
2. Shut off the air to the pump.
3. Close the bleed-type master air valve (required in your system).
4. Unlock the gun/valve trigger safety.
5. Hold a metal part of the gun/valve firmly to the side of a grounded metal pail, and trigger the gun/valve to relieve pressure.
6. Lock the gun/valve trigger safety.
7. Open the drain valve and/or the pump bleeder valve (required in your system), having a container ready to catch the drainage.
8. Leave the drain valve open until you are ready to dispense again.

If you suspect that the spray tip or hose is completely clogged, or that pressure has not been fully relieved after following the steps above, ***very slowly*** loosen the tip guard retaining nut or hose end coupling and relieve pressure gradually, then loosen completely, then clear the tip or hose.

⚠ WARNING

MOVING PARTS HAZARD
Moving parts can pinch or amputate your fingers or other body parts. When the pump is operating, the priming piston (Q) (located at the pump intake) and the air motor piston (located behind the air motor shield) move. Therefore, never operate the pump with the air motor shield removed, and keep your fingers and hands away from the priming piston.

Before attempting to clear an obstruction from the priming piston (Q) or service the pump, follow the **Pressure Relief Procedure** at left to prevent the pump from starting accidentally.

Flush the Pump Before Using

The pump is tested with lightweight oil, which is left in to protect the pump parts. If the fluid you are using may be contaminated by the oil, flush it out with a compatible solvent before using the pump.

Keep the wet-cup (136) one-half full with Graco Throat Seal Liquid (TSL), to help prevent the fluid being pumped from drying on the displacement rod and damaging the packings. Do not use TSL with food or sanitary applications.

⚠ WARNING

For your safety, read the warning section **Fire or Explosion Hazard** on page 4 before flushing, and follow all recommendations given there.

Operation

Starting and Adjusting the Pump

1. Make sure the air regulator (H) is closed.
2. Open the bleed–type master air valve (G).
3. Hold a metal part of the spray gun firmly to the side of a grounded metal pail and hold the trigger open. Now slowly open the air regulator until the pump starts. See the **Typical Installation** on page 7.
4. Cycle the pump slowly until all the air is pushed out and the pump and hoses are fully primed.
5. Release the spray gun trigger and engage the safety latch. The pump will stall against pressure when the trigger is released.
6. If the pump fails to prime properly, open the bleeder valve plug (139) slightly. Use the bleeder hole (P) on the underside of the valve body (138) as a priming valve until the fluid appears at the hole. See Fig. 3.
7. Close the bleeder valve plug (139).

⚠ WARNING

To reduce the risk of fluid injection, do not use your hand or fingers to cover the bleeder hole when priming the pump.

With the pump and lines primed, and with adequate air pressure and volume supplied, the pump will start and stop as the spray gun is opened and closed.

Use the air regulator to control the pump speed and the fluid pressure. Always use the lowest air pressure necessary to get the desired results. Higher pressures cause premature tip/nozzle and pump wear.

⚠ WARNING

To reduce the risk of overpressurizing your system, which could result in component rupture and cause serious bodily injury, never exceed 0.7 MPa, 7 bar (100 psi) incoming air pressure to the pump.

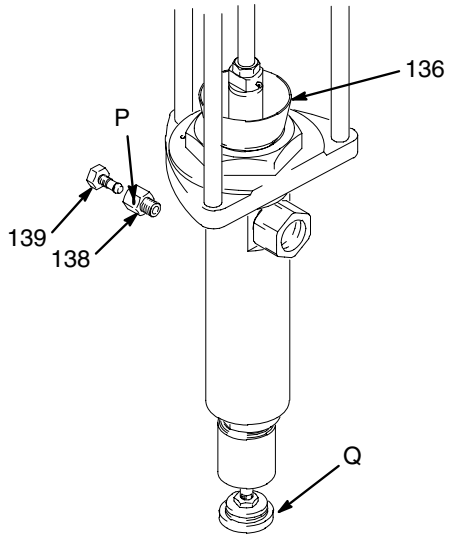

Fig. 3

Never allow the pump to run dry of the fluid being pumped. A dry pump will quickly accelerate to a high speed, possibly damaging itself. A pump runaway valve, which shuts off the air supply to the pump if the pump accelerates beyond the pre–set speed, is available.

If your pump accelerates quickly, or is running too fast, stop it immediately and check the fluid supply. If the supply container is empty and air has been pumped into the lines, refill the container and prime the pump and the lines with fluid, or flush and leave it filled with a compatible solvent. Be sure to eliminate all air from fluid system.

Operation

Shutdown and Care of the Pump

⚠ WARNING

To reduce the risk of serious injury whenever you are instructed to relieve pressure, always follow the **Pressure Relief Procedure** on page 8.

For overnight shutdown, follow the **Pressure Relief Procedure** on page 8. Always stop the pump at the bottom of the stroke to prevent the fluid from drying on the exposed displacement rod and damaging the throat packings.

Every 40 hours of operation, check that the packing nut/wet cup is tight. Follow the **Pressure Relief Procedure** and tighten the nut just snug – do not overtighten, or the packings may be damaged.

Flushing

To reduce the risk of fluid injection injury, static sparking, or splashing in the eyes or on the skin, **relieve the pressure**, and remove the spray tip (spray guns or spray valves only) before flushing. Hold a metal part of the gun/valve firmly to the side of a grounded metal pail and use the lowest possible fluid pressure during flushing.

Always flush the pump before the fluid dries on the displacement rod. Never leave water or water–based fluid in the pump overnight. First, flush with water or a compatible solvent, then with mineral spirits. Relieve the pressure, but leave the mineral spirits in the pump to protect the parts from corrosion.

Lubrication

The accessory air line lubricator (F) provides automatic air motor lubrication. For daily manual lubrication, disconnect the air supply, place about 15 drops of light machine oil in the pump air inlet, and reconnect the air supply to blow oil into the motor.

Notes

Troubleshooting

⚠ WARNING

To reduce the risk of serious injury whenever you are instructed to relieve pressure, always follow the **Pressure Relief Procedure** on page 8.

Before servicing this equipment, always make sure to relieve the pressure.

NOTE: Check all possible problems and solutions before disassembling the pump.

Problem	Cause	Solution
Pump fails to operate	Restricted line or inadequate air supply	Clear line; see **Technical Data** on pages 22–24.
	Insufficient air pressure; closed or clogged air valve, etc.	Open; clear.
	Obstructed fluid hose or spray gun	Clear.*
	Dried fluid on the displacement rod.	Clean; see **Service** on page 14.
	Dirty or worn air motor parts	Clean; service. See air motor manual, supplied.
	Air motor icing	Reduce air line moisture content.**
Pump operates, but output is low on both strokes	Restricted line or inadequate air supply	Clear line; See **Technical Data** on pages 22–24.
	Insufficient air pressure; closed or clogged air valve, etc.	Open; clear.
	Obstructed fluid hose or gun	Clear.*
	Open bleeder valve	Close.
	Air leaking into supply drum	Check inductor on ram plate seal.
	Fluid too heavy for pump to prime	Use bleeder valve (see **Operation** on page 8). Use inductor or ram unit.
	Worn throat packings in displacement pump	Replace gland/packing stack.
	Air motor icing	Reduce air line moisture content.**
Pump operates, but output low on downstroke	Fluid too heavy for pump to prime	Use bleeder valve (see **Operation** on page 8). Use inductor or ram unit.
	Held open or worn piston valve or packings	Clear valve; replace gland/packing stack.
	Air motor icing	Reduce air line moisture content.**
Pump operates but output low on upstroke	Held open or worn piston valve or packings	Clear valve; replace gland/packing stack.
	Air motor icing	Reduce air line moisture content.**

Continued on the following page.

Troubleshooting

Continued from the previous page.

Problem	Cause	Solution
Erratic or accelerated pump speed	Exhausted fluid supply	Refill and prime.
	Fluid too heavy for pump to prime	Use bleeder valve (See **Operation** on page 8). Use inductor or ram unit.
	Held open or worn piston valve or packings	Clear valve; replace gland/packing stack.
	Held open or worn priming piston	Clear; service.
	Worn throat packings in displacement pump	Replace gland/packing stack.
	Air motor icing	Reduce air line moisture content.**

* To clear the pump, follow the **Pressure Relief Procedure** on page 8. Disconnect the fluid line. If the pump starts when the air is turned on, the hose or spray gun is obstructed.

**Be sure there is a vertical loop in the air line drop hose from the main air supply line. Also use an air and moisture separator to minimize moisture in the air line.

Displacement Pump Service

⚠ WARNING

To reduce the risk of serious bodily injury, including injection, splashing in the eyes, or injury from moving parts, always follow the **Pressure Relief Procedure** on page 8 when checking or servicing any pat of the spray/dispensing system, when installing, cleaning, or changing spray tips/nozzles, and whenever you stop spraying/dispensing.

See Fig. 4 unless otherwise noted.

Before You Start

1. Flush the pump with compatible solvent if possible. Follow the **Pressure Relief Procedure** on page 8.

2. If you are using a repair kit to service the pump, use all the new parts. Parts included in the kits are marked with a dagger (for example, 124†) in the text and drawings.

Disassembly

1. Disconnect the hoses, remove the pump from its mounting, and clamp it in a vise. Unscrew the coupling nut (9) and the tie rod locknuts (3). Remove the cotter pin (1), loosen the jam nut (5), and unscrew the connecting rod (11) from the displacement rod (108). Pull the motor away from the displacement pump.

2. Place the pump housing (109) in a padded jaw vise with the outlet (107) against one jaw.

3. Remove the wet–cup/packing nut (136), and packing nut (140). Remove the packings from the packing nut.

4. Push the displacement rod (108) down so the priming piston (119) clears the intake cylinder (117).

5. Use two wrenches to oppositely turn and loosen the hex nuts (120) on the piston rod (122).

6. Remove the valve plate (118), valve guide (121), and the priming piston (119).

7. Remove the intake cylinder (117) and o–ring (124).

8. Pull on the piston rod (122) to remove the displacement rod (108) from the pump housing (109).

9. Remove the cotter pin (126) and unthread the piston rod (122) from the piston valve (112).

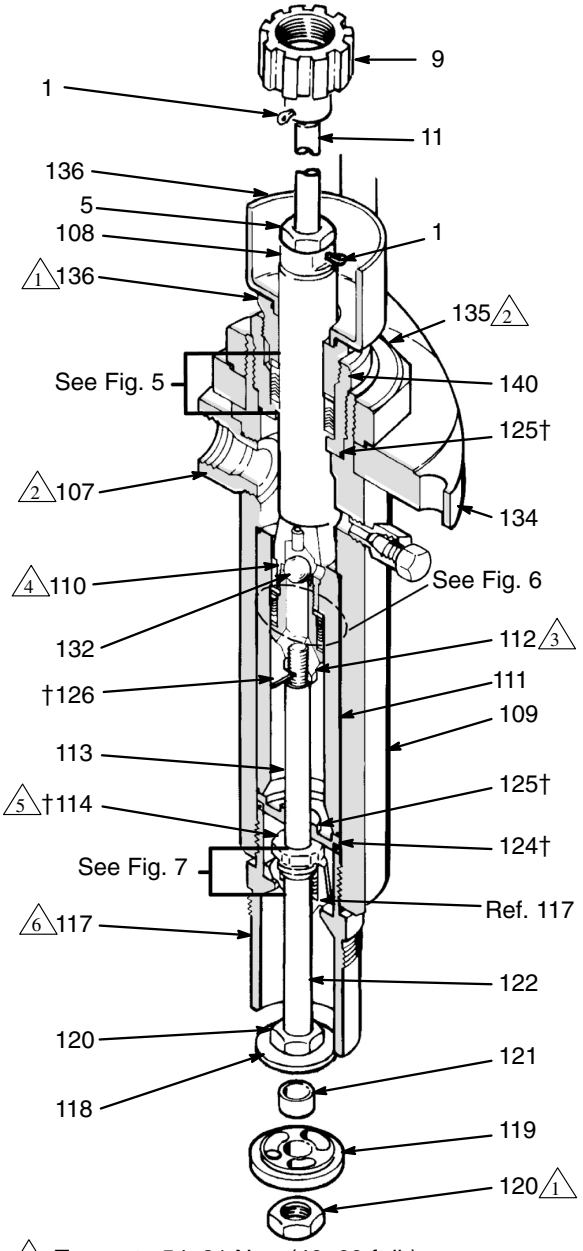

1 Torque to 54–81 N•m (40–60 ft-lb).
2 Torque to 420–460 N•m (310–340 ft-lb).
3 Apply sealant and torque to 81–102 N•m (60–76 ft-lb).
4 Apply sealant to threads.
5 Torque to 37–47 N•m (25–35 ft-lb).
6 Torque to 129–149 N•m (94–110 ft-lb).

Fig. 4

Displacement Pump Service

10. Remove the packing nut (114) from the piston rod (122). Remove the packings and female gland from the intake cylinder's packing housing (Ref. 117).

11. Unscrew the piston valve (112) from the piston valve housing (110), taking care not to drop the piston ball (132).

12. Remove the packings and glands from the piston.

13. Remove the cylinder (111) and o–rings (125). If the cylinder cannot be removed easily, contact your Graco distributor for assistance.

14. Inspect the outer surface of the displacement rod (108) and the inner surface of the pump cylinder (111) for scoring and wear by holding them up to a light or running a finger over the surface. Replace these parts, if necessary. If the rod is worn, the packings will not seal properly and the pump will leak. If the cylinder is worn, the pump will not stall against pressure.

15. Clean all parts in a compatible solvent, inspect them, and replace as necessary.

Reassembly

1. Place an o–ring (125†) on the packing nut (140). Screw the packing nut into the pump housing (109).

NOTE: Lubricate the parts with a compatible lubricant before assembling.

2. Refer to Fig. 5. The gland/packing stack (159†) for the throat is preassembled. Do not disassemble the stack. Place the gland/packing stack into the packing nut (140). Be sure the lips of the v–packings are facing down.

Throat Packings
All Models

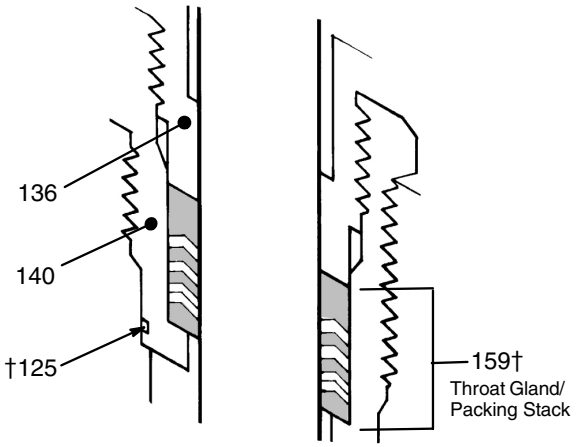

Note: Lips of v–packings must face down.

Fig. 5

Displacement Pump Service

3. Loosely install the wet–cup/packing nut (136) into the pump housing (109).
4. Refer to Fig. 6 for displacement pump service. Install the gland/packing stack (160†) on the piston valve (112) as follows, with the lips of the v–packings facing up.
5. Slide the gland/packing stack supplied in Repair Kit 222101 down onto the piston valve (112). Do not disassemble the packing stack, and be sure the lips of the v–packings are facing up. Install the backup washer (131) on top of the gland/packing stack.

Piston Packings

Note: Lips of v–packing must face up.

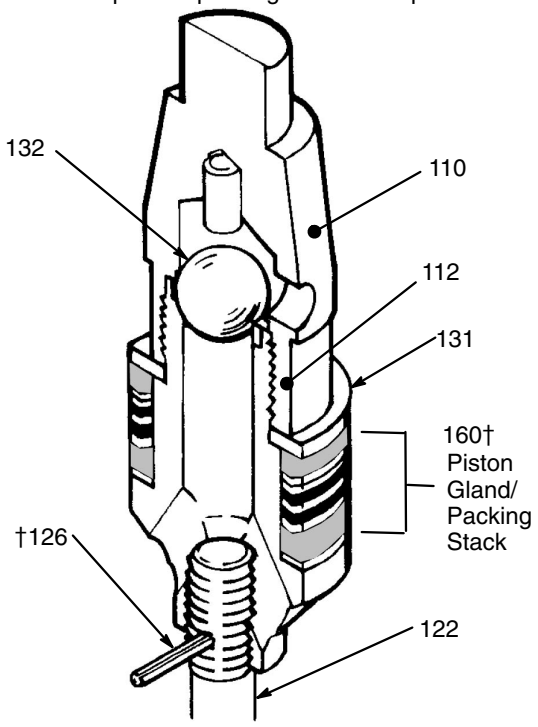

Fig. 6

Displacement Pump Service

6. Install the piston ball (132) in the piston valve housing (110). Apply medium grade thread sealant to the threads of the piston valve (112) and housing (110). Screw the piston valve into the piston valve housing, torquing to 81–102 N•m (60–76 ft-lb). Screw the piston rod (122) into the piston valve, aligning the holes. Insert the cotter pin (126†).
7. Place the pump housing (109) in the vise. Install the new o–rings (125†) on the pump cylinder (111). Lubricate the cylinder and slide it into the pump housing as far as possible.
8. Slide the rod guide (113) onto the piston rod (122), with the flat side facing down.
9. Install the displacement rod assembly through the bottom of the pump, guiding it carefully through the throat packings.
10. Refer to Fig. 7. The gland/packing stack (158†) for the intake valve is preassembled. Do not disassemble the stack. Install the gland/packing stack in the intake cylinder's packing housing (Ref. 117). Be sure the lips of the v–packings are facing up. Install the packing nut (114†) and torque to 34–47 N•m (25–35 ft-lb). Slide the assembly, packing nut first, onto the piston rod (122).

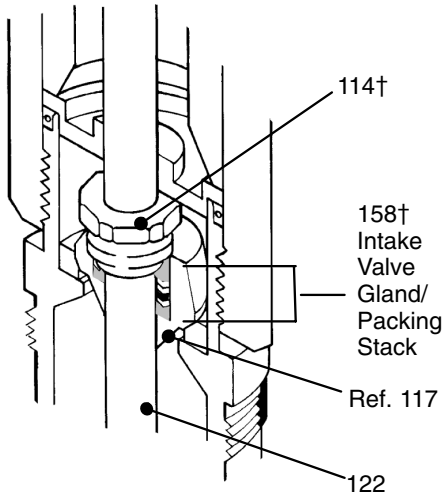

Fig. 7

11. Place an o–ring (124†) around the intake cylinder (117). Screw the cylinder into the pump housing (109). Torque to 129–149 N•m (94–110 ft-lb).
12. Thread the nut (120) onto the bottom of the piston rod. Install the valve plate (118), valve guide (121), priming piston (119), and the other nut (120).
13. Holding both nuts (120) with a wrench, torque the bottom nut to 54–81 N•m (40–60 ft-lb).
14. Tighten the packing nut (140). Torque the wet–cup nut to 54–81 N•m (40–60 ft-lb).
15. Reconnect the displacement pump (14) to the air motor (15). Refill the wet–cup (136) with TSL. Reconnect the ground wire to the air motor if it was disconnected during service.

Parts

15:1 Senator, 25:1 Bulldog, and 55:1 King Pumps

1. Standard Bulldog Air Motor Shown.
2. Lips of v–packings must face down.
3. Torque to 420–460 N•m (310–340 ft-lb).
4. Torque to 54–81 N•m (40–60 ft-lb).
5. Lips of v–packings must face up.
6. Apply sealant to threads.
7. Apply sealant to threads. Torque to 81–102 N•m (60–76 ft-lb).
8. Torque to 129–149 N•m (94–110 ft-lb).
9. Torque to 34–47 N•m (25–35 ft-lb).
10. Screw plug completely into valve housing.
11. Torque to 30–38 N•m (22–28 ft-lb).

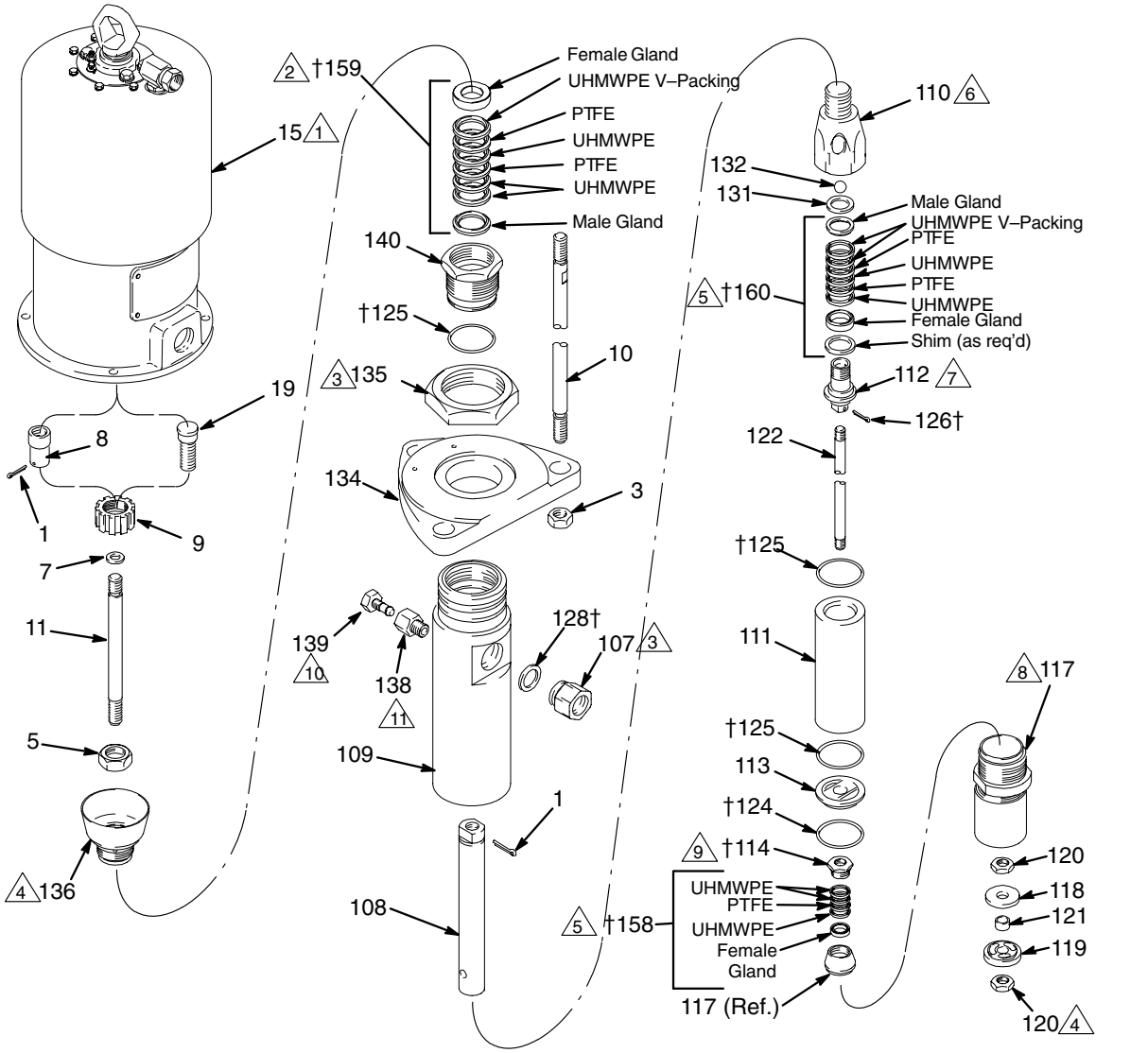

Parts

19 liter (5 gallon) Drum Size

Model 222528, Series A
25:1 Ratio Bulldog Pump with Standard Air Motor
Includes items 1–19, below

Ref. No.	Part No.	Description	Qty.
1	100103	PIN, cotter	1
3	101712	NUT, lock; 5/8–11; nylon insert	3
5	101936	NUT, jam hex; 3/4–10 thread	1
9	161544	NUT, shoulder; 1–1/4–12 thread	1
10	167911	ROD, tie; 178 mm (7 in.) between shoulders; 5/8–11 thread	3
14	222639	DISPLACEMENT PUMP; See parts list on page 20	1

Model 223986, Series A
25:1 Ratio Bulldog Pump with Quiet Air Motor
Includes items 1–19, below

Ref. No.	Part No.	Description	Qty.
15	208356	BULLDOG STANDARD AIR MOTOR; Used on Model 222528 only; See manual 307049 for parts	1
	215255	BULLDOG QUIET AIR MOTOR; Used on Model 223986 only; See manual 307304 for parts	1
19	166548	ROD, connecting; 30 mm(1.16 in.) between holes	1

200 liter (55 gallon) Drum Size

Model 222527, Series A
25:1 Ratio Bulldog Pump with Standard Air Motor
Includes items 1–15, below

Model 223985, Series A
25:1 Ratio Bulldog Pump with Quiet Air Motor
Includes items 1–15, below

Model 222518, Series A
15:1 Ratio Senator Pump with Standard Air Motor
Includes items 1–15, below

Ref. No.	Part No.	Description	Qty.
1	100103	PIN, cotter	2
3	101712	NUT, lock; 5/8–11; nylon insert	3
5	101936	NUT, jam hex; 3/4–10 thread	1
7	158674	O–RING; buna–N	1
8	168211	NUT, connecting rod; 3/4–10 thread	1
9	168210	NUT, shoulder; 1–1/4 in.–12 thread	1
10	168254	ROD, tie; 344 mm (13.56 in.) between shoulders; 5/8–11 thread	3
11	168253	ROD, connecting; 171 mm (6.75 in.) between holes	1
14	222639	DISPLACEMENT PUMP; See parts list on page 20	1

Model 222545, Series B
55:1 Ratio King Pump with Standard Air Motor
Includes items 1–15, below

Model 223992, Series B
55:1 Ratio King Pump with Quiet Air Motor
Includes items 1–15, below

Ref. No.	Part No.	Description	Qty.
15	208356	BULLDOG STANDARD AIR MOTOR; Used on Model 222527 only; See manual 307049 for parts	1
	215255	BULLDOG QUIET AIR MOTOR; Used on Model 223985 only; See manual 307304 for parts	1
	245111	KING STANDARD AIR MOTOR; Used on Model 222545 only; See manual 309347 for parts	1
	220106	KING QUIET AIR MOTOR; Used on Model 223992 only; See manual 309348 for parts	1
	217540	SENATOR STANDARD AIR MOTOR; Used on Model 222518 only; See manual 307592 for parts	1

Parts

Displacement Pump 222639, Series B
With UHMWPE and PTFE®Packings
Includes items 107–160, below

Ref. No.	Part No.	Description	Qty.
107	178080	ADAPTER, outlet; M39(m) x 1 in. npt(f)	1
108	185030	ROD, displacement	1
109	178126	HOUSING, pump	1
110	217549	HOUSING, valve, piston	1
111	185379	CYLINDER, pump	1
112	222100	VALVE, piston	1
113	178086	GUIDE, rod	1
114†	183755	NUT, packing	1
117	222637	CYLINDER, valve, intake	1
118	178162	PLATE, valve, check	1
119	178090	PISTON, priming	1
120	106257	NUT, machine, hex; M16	2
121	178109	GUIDE, valve	1
122	185378	ROD, piston	1
124†	106260	O–RING; PTFE	1
125†	106259	O–RING; PTFE	3
126†	100103	PIN, cotter	1
128†	107083	O–RING; Viton	1
131	178163	WASHER, back–up	1
132✓	106269	BALL, piston	1

Ref. No.	Part No.	Description	Qty.
134	178081	PLATE, tie	1
135	178079	NUT, cylinder; M80	1
136	236993	PACKING NUT/WET–CUP ASSY.	1
138	165702	BLEEDER VALVE	1
139	190128	PLUG, bleeder valve	1
140	180394	NUT, packing	1
141▲	172477	TAG, instruction (not shown)	1
158†	223361	GLAND/PACKING STACK, intake valve	1
159†	223362	GLAND/PACKING STACK, throat	1
160†	223363	GLAND/PACKING STACK, piston	1

✓ *Keep these spare parts on hand to reduce down time.*

† *These parts are included in Repair Kit 222101, which may be purchased separately.*

▲ *Replacement Danger and Warning labels, tags, and cards are available at no cost.*

Optional Packing Repair Stacks
Leather and UHMWPE
Must be purchased separately

223490	Throat Gland/Packing Stack
223491	Piston Gland/Packing Stack
223494	Intake Valve Gland/Packing Stack

Notes

Technical Data – 15:1 Senator Pump

Category	Data
Maximum working pressure	10.7 MPa, 107 bar (1560 psi)
Air operating range	.07–0.7 MPa, 0.7–7 bar (10–100 psi)
Pump cycles per 3.8 liters (per 1 gallon)	20
Maximum recommended pump speed for intermittent operation	60 cycles per minute
Air inlet size	3/4 npsm(f)
Fluid outlet size	1 in. npt(f)
Wetted parts	17–4 PH and 304 Grades of Stainless Steel, Chrome–plated Stainless Steel, Zinc–plated Carbon Steel, Ultra–high Molecular Weight Polyethylene, Tungsten Carbide, PTFE,® and Viton®
Stroke length	120 mm (4.75 in.)

Viton®

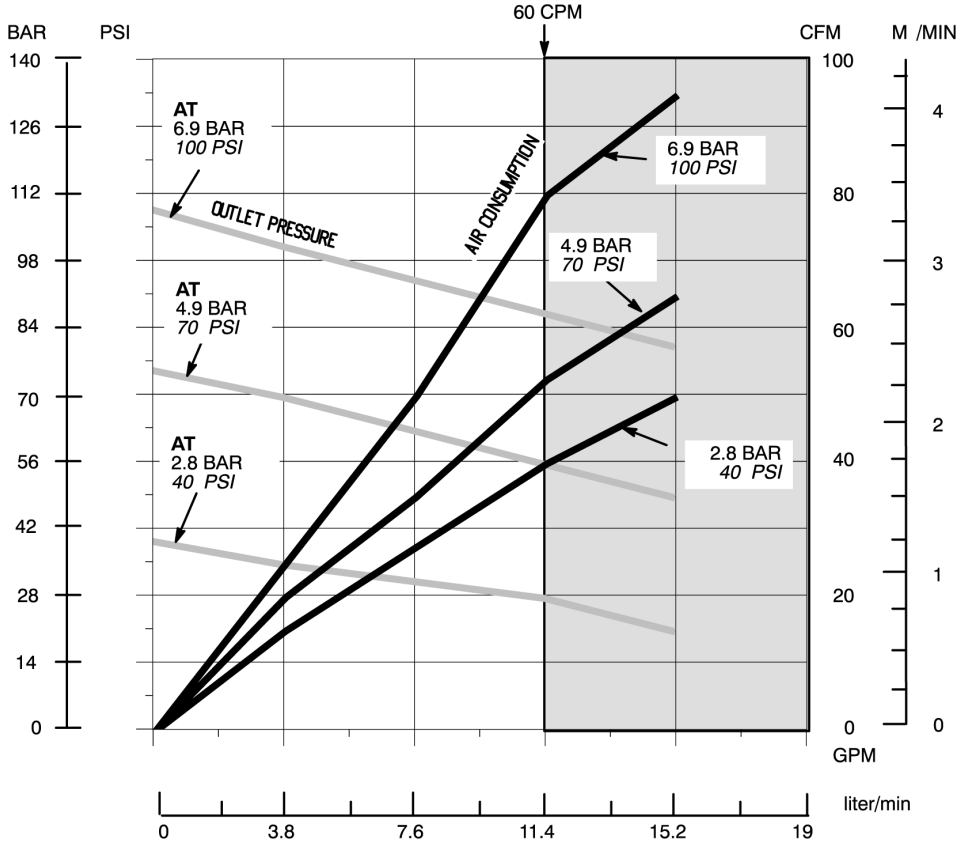

Pump Performance Chart

To find outlet pressure (bar/psi) at a specific delivery (liter/min–GPM) and operating air pressure (bar/psi):

1. Locate desired delivery along bottom of chart.
2. Read vertical line up to intersection with selected fluid outlet pressure curve. Curve slopes from left to right. Follow left to scale and read outlet pressure.

To find pump air consumption (m^3/min–CFM) specific delivery (liter/min–GPM) and operating air pressure (bar/psi):

1. Locate desired delivery along bottom of chart.
2. Read vertical line up to intersection with selected air consumption curve. Curve slopes from right to left. Follow right to scale and read air consumption. Follow left to scale and read outlet pressure.

Technical Data – 25:1 Bulldog Pump

Category	Data
Maximum working pressure	17.5 MPa, 175 bar (2500 psi)
Air operating range	.07–0.7 MPa, 0.7–7 bar (10–100 psi)
Pump cycles per 3.8 liters (per 1 gallon)	20
Maximum recommended pump speed for intermittent operation	60 cycles per minute
Air inlet size	3/4 npsm(f)
Fluid outlet size	1 in. npt(f)
Wetted parts	17–4 PH and 304 Grades of Stainless Steel, Chrome–plated Stainless Steel, Zinc–plated Carbon Steel, Ultra–high Molecular Weight Polyethylene, Tungsten Carbide, PTFE,® and Viton®
Stroke length	120 mm (4.75 in.)

Viton® is a registered trademarks of the DuPont Co.

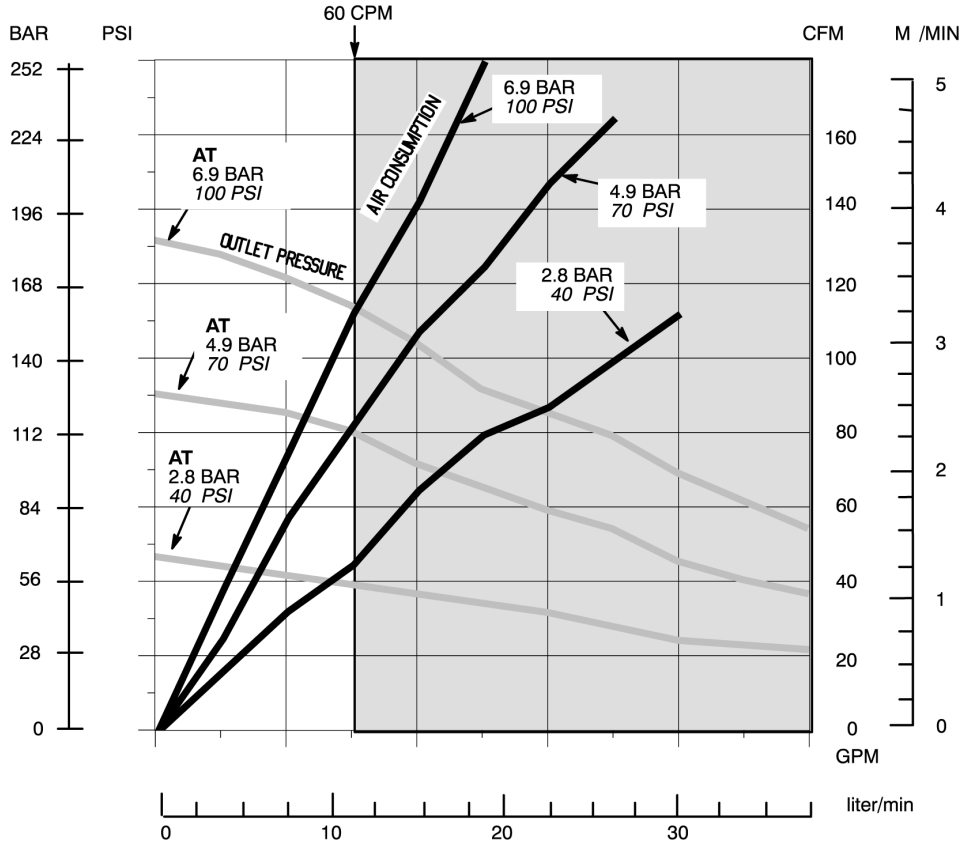

Pump Performance Chart

To find outlet pressure (bar/psi) at a specific delivery (liter/min–GPM) and operating air pressure (bar/psi):

1. Locate desired delivery along bottom of chart.
2. Read vertical line up to intersection with selected fluid outlet pressure curve. Curve slopes from left to right. Follow left to scale and read outlet pressure.

To find pump air consumption (m^3/min–CFM) specific delivery (liter/min–GPM) and operating air pressure (bar/psi):

1. Locate desired delivery along bottom of chart.
2. Read vertical line up to intersection with selected air consumption curve. Curve slopes from right to left. Follow right to scale and read air consumption. Follow left to scale and read outlet pressure.

Technical Data – 55:1 King Pump

Category	Data
Maximum working pressure	34.5 MPa, 345 bar (5000 psi)
Air operating range	.07–0.7 MPa, 0.7–7 bar (10–100 psi)
Pump cycles per 3.8 liters (per 1 gallon)	20
Maximum recommended pump speed for intermittent operation	60 cycles per minute
Air inlet size	3/4 npsm(f)
Fluid outlet size	1 in. npt(f)
Wetted parts	17–4 PH and 304 Grades of Stainless Steel, Chrome–plated Stainless Steel, Zinc–plated Carbon Steel, Ultra–high Molecular Weight Polyethylene, Tungsten Carbide, PTFE,® and Viton®
Stroke length	120 mm (4.75 in.)

Viton ® is a registered trademarks of the DuPont Co.

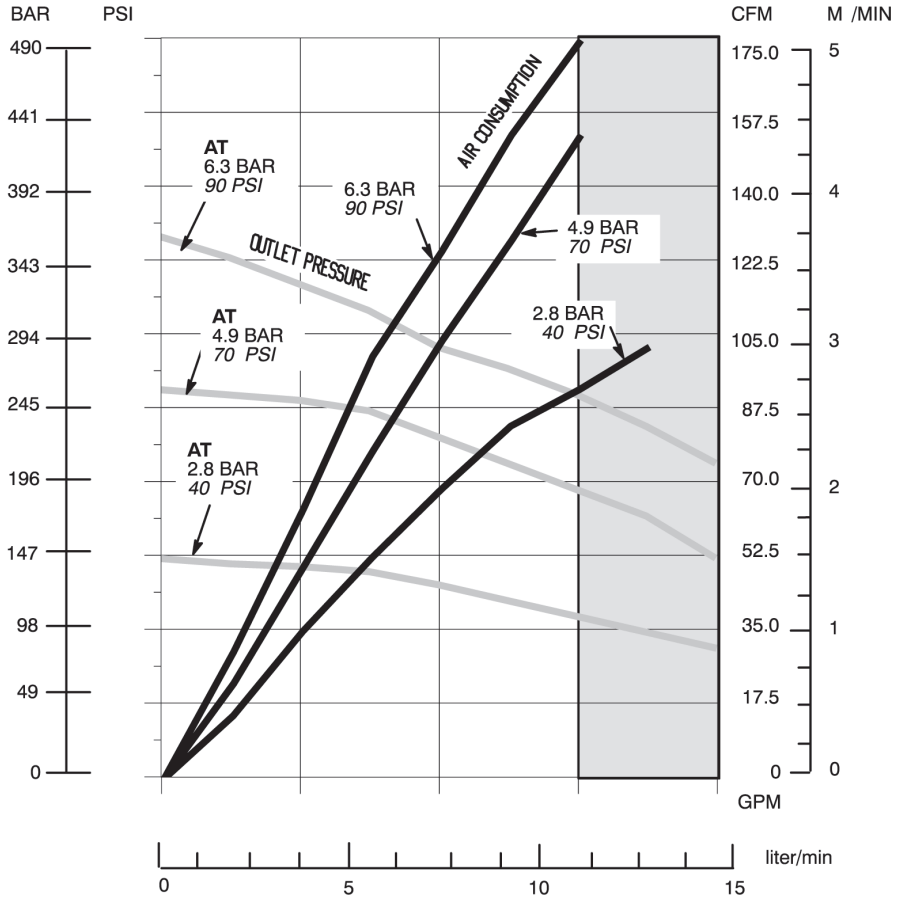

Pump Performance Chart

To find outlet pressure (bar/psi) at a specific delivery (liter/min–GPM) and operating air pressure (bar/psi):

1. Locate desired delivery along bottom of chart.
2. Read vertical line up to intersection with selected fluid outlet pressure curve. Curve slopes from left to right. Follow left to scale and read outlet pressure.

To find pump air consumption (m^3/min–CFM) specific delivery (liter/min–GPM) and operating air pressure (bar/psi):

1. Locate desired delivery along bottom of chart.
2. Read vertical line up to intersection with selected air consumption curve. Curve slopes from right to left. Follow right to scale and read air consumption. Follow left to scale and read outlet pressure.

Dimensions

	Pump Model	
	222528 223986	222518 222527 223985 222545 223992
A	1194 mm (47 in.)	1365 mm (53.75 in.)
B	654 mm (25.75 in.)	826 mm (32.5 in.)
D	236 mm (9.3 in.)	403 mm (15.85 in.)
C	68.2 mm (2.69 in.)	68.2 mm (2.69 in.)

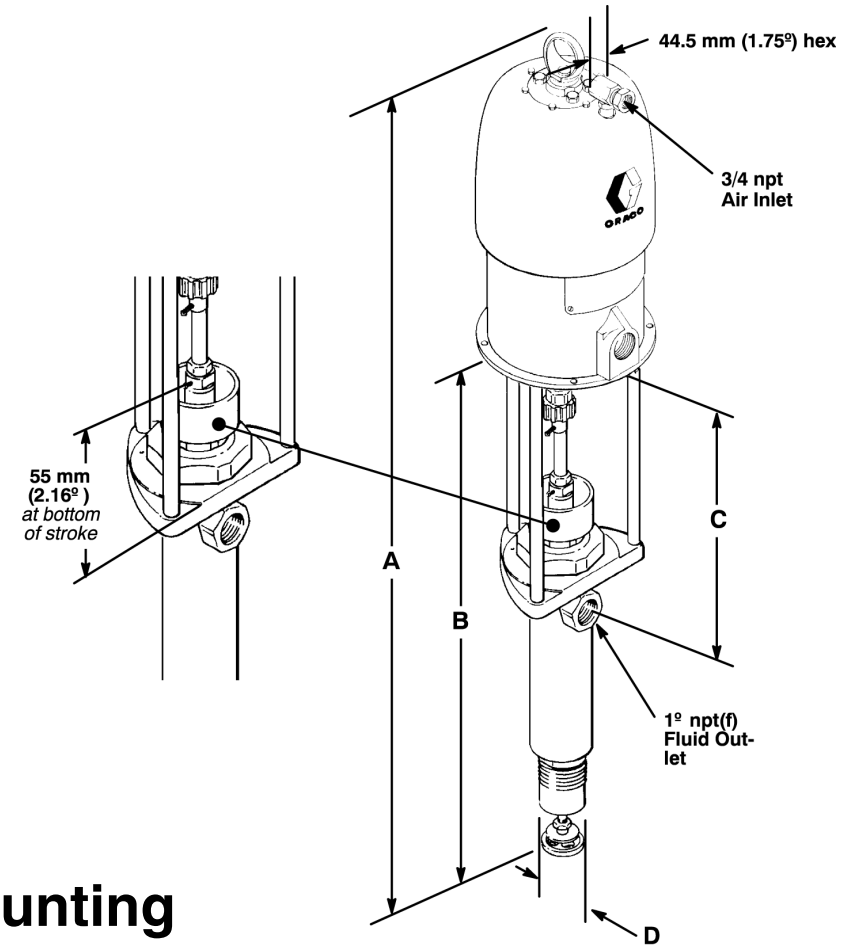

Air Motor Mounting

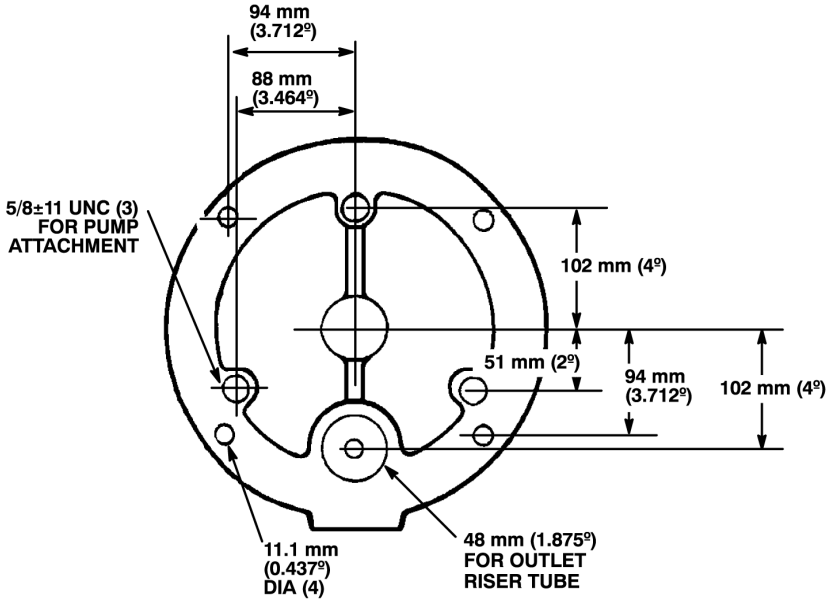

The Graco Standard Warranty

Graco warrants all equipment manufactured by Graco and bearing its name to be free from defects in material and workmanship on the date of sale to the original purchaser for use. With the exception of any special, extended, or limited warranty published by Graco, Graco will, for a period of twelve months from the date of sale, repair or replace any part of the equipment determined by Graco to be defective. This warranty applies only when the equipment is installed, operated and maintained in accordance with Graco's written recommendations.

This warranty does not cover, and Graco shall not be liable for general wear and tear, or any malfunction, damage or wear caused by faulty installation, misapplication, abrasion, corrosion, inadequate or improper maintenance, negligence, accident, tampering, or substitution of non–Graco component parts. Nor shall Graco be liable for malfunction, damage or wear caused by the incompatibility of Graco equipment with structures, accessories, equipment or materials not supplied by Graco, or the improper design, manufacture, installation, operation or maintenance of structures, accessories, equipment or materials not supplied by Graco.

This warranty is conditioned upon the prepaid return of the equipment claimed to be defective to an authorized Graco distributor for verification of the claimed defect. If the claimed defect is verified, Graco will repair or replace free of charge any defective parts. The equipment will be returned to the original purchaser transportation prepaid. If inspection of the equipment does not disclose any defect in material or workmanship, repairs will be made at a reasonable charge, which charges may include the costs of parts, labor, and transportation.

THIS WARRANTY IS EXCLUSIVE, AND IS IN LIEU OF ANY OTHER WARRANTIES, EXPRESS OR IMPLIED, INCLUDING BUT NOT LIMITED TO WARRANTY OF MERCHANTABILITY OR WARRANTY OF FITNESS FOR A PARTICULAR PURPOSE.

Graco's sole obligation and buyer's sole remedy for any breach of warranty shall be as set forth above. The buyer agrees that no other remedy (including, but not limited to, incidental or consequential damages for lost profits, lost sales, injury to person or property, or any other incidental or consequential loss) shall be available. Any action for breach of warranty must be brought within two (2) years of the date of sale.

Graco makes no warranty, and disclaims all implied warranties of merchantability and fitness for a particular purpose in connection with accessories, equipment, materials or components sold but not manufactured by Graco. These items sold, but not manufactured by Graco (such as electric motors, switches, hose, etc.), are subject to the warranty, if any, of their manufacturer. Graco will provide purchaser with reasonable assistance in making any claim for breach of these warranties.

In no event will Graco be liable for indirect, incidental, special or consequential damages resulting from Graco supplying equipment hereunder, or the furnishing, performance, or use of any products or other goods sold hereto, whether due to a breach of contract, breach of warranty, the negligence of Graco, or otherwise.

FOR GRACO CANADA CUSTOMERS
The parties acknowledge that they have required that the present document, as well as all documents, notices and legal proceedings entered into, given or instituted pursuant hereto or relating directly or indirectly hereto, be drawn up in English. Les parties reconnaissent avoir convenu que la rédaction du présente document sera en Anglais, ainsi que tous documents, avis et procédures judiciaires exécutés, donnés ou intentés à la suite de ou en rapport, directement ou indirectement, avec les procedures concernées.

Graco Information

TO PLACE AN ORDER,

DispenseRite

metermixdispense.com
866 967 4660

All written and visual data contained in this document reflects the latest product information available at the time of publication. Graco reserves the right to make changes at any time without notice.

Sales Offices: Minneapolis, Detroit
International Offices: Belgium, Korea, Hong Kong, Japan

GRACO INC. P.O. BOX 1441 MINNEAPOLIS, MN 55440–1441
www.graco.com
PRINTED IN U.S.A. 307982 11/1966, Revised 10/2003