Setup-Operation

ExactaBlend™ AGP Advanced Glazing Proportioner

3A2894P

EN

For dispensing two component silicone, polysulfide, and urethane materials.
For professional use only.

Not approved for use in explosive atmospheres or hazardous locations.

See page 4 for model information, including maximum working pressure and approvals.

Important Safety Instructions
Read all warnings and instructions in this manual. Save these instructions.

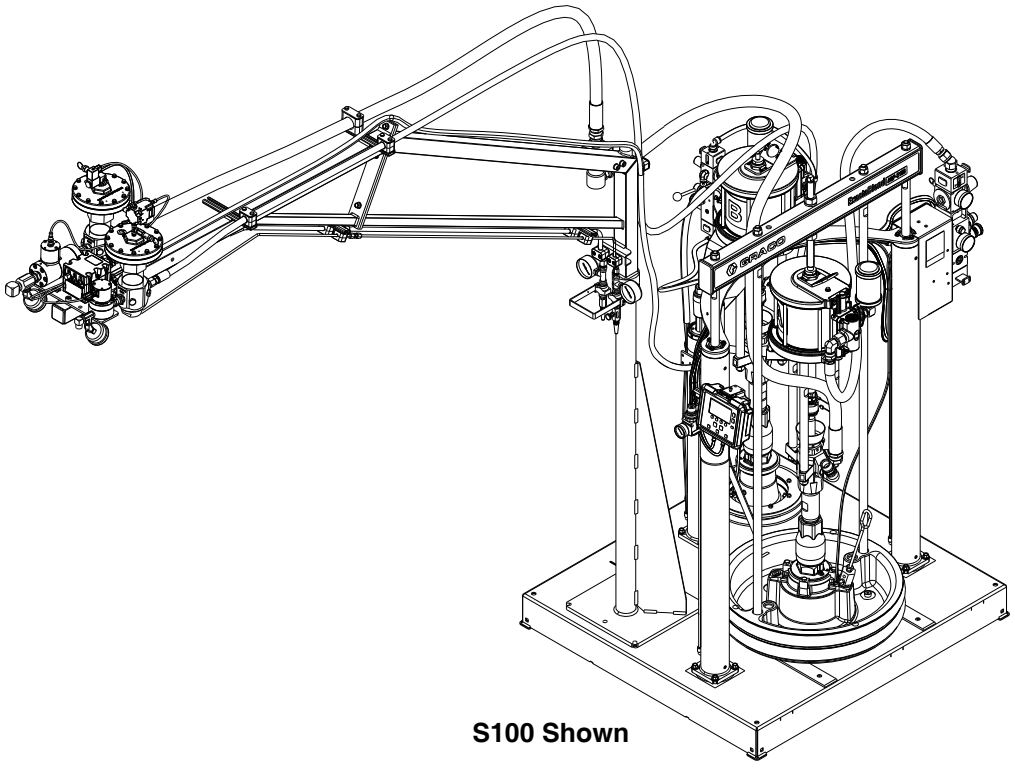

S100 Shown

PROVEN QUALITY. LEADING TECHNOLOGY.

Contents

Contents 2
Related Manuals 3
Models 4
Base Machines 4
Dispense Valves 5
Warnings 6
Important Isocyanate (ISO) Information 8
Isocyanate Conditions 8
Material Self-ignition 8
Keep Components A and B Separate 8
Moisture Sensitivity of Isocyanates 9
Changing Materials 9
Component Identification 10
S100 Models - 55 Gallon/5 Gallon (200 Liter/20 Liter) 10
S100 Model - 5 Gallon/5Gallon (20 Liter/20 Liter) 11
U100 Models 12
P100 Models 13
Electrical Enclosure 14
Display Module (DM) 15
User Interface 15
Main Display Components 17
DM Screen Navigation Diagram 18
Integrated Air Controls 19
Fluid Control Module (FCM) 21
Light Tower 24R824 22
Installation 24
Grounding 34
Setup 35
Startup 44
Base Purge 46
Pressure Relief Procedure 47
Shutdown 49
Calibration Check 50
Maintenance 53
Adjust Packing Nuts 53
Filters 53
Seals 53
DM - Battery Replacement and Screen Cleaning 54
Software Update Procedure 55
Troubleshooting 56
Mechanical and Electrical 56
Display Module 60
Accessories and Kits 62
Low Level Sensors, 24R935 (S100 and P100 only) 62
Calibration Check Assembly, 24R777 62
USB Kit, 24R936 62
MD2 Nose Pieces 62
Catalyst (B) Hoses 63
Restrictor Kit, 24R804 63
Restrictor Kit 24W146 63
Caster Kit, 24T091 63
Mixer Elements for MD2 64
Appendix A - DM Icons Overview 65
Setup Screen Icons 65
Run Screen Icons 66
Appendix B - DM Setup Screens Overview 67
Appendix C - DM Run Screens Overview 69
Appendix D - DM Error Codes 71
Schematics 72
Dimensions 76
Technical Data 78
Graco Standard Warranty 80

Related Manuals

Manuals are available at www.graco.com. Component manuals below are in English:

System Manuals	
332452	ExactaBlend AGP Advanced Glazing Proportioner, Parts
332453	ExactaBlend AGP Advanced Glazing Proportioner - Accessory Kits, Kit Instructions
Ram Manuals	
3A0233	Air-Powered Ram, Instructions-Parts
Pump Manuals	
312375	Check-Mate® Displacement Pumps, Instructions-Parts
Air Motor Manuals	
3A1211	SaniForce™ Air Motors, Instructions-Parts
311238	NXT® Air Motor, Instructions-Parts
333007	ExactaBlend AGP Air Motor, Instructions-Parts
Displacement Pump Manuals	
309577	Displacement Pump, Repair-Parts
Dispense Valve Manuals	
312185	MD2 Valve, Instructions-Parts
308253	Ultra-lite™ Pistol Grip Flo-Gun, Instructions-Parts
Flow Meter Manuals	
308778	Volumetric Fluid Flow Meter, Instructions-Parts
309834	Helical Gear Fluid Flow Meters, Instructions-Parts
Fluid Filters Manuals	
307273	Fluid Outlet Filter, Instructions-Parts List
Fluid Regulators Manuals	
307517	Mastic Fluid Regulators, Instructions-Parts List
308647	Fluid Pressure Regulators, Instructions-Parts List
Pressure Pot Manuals	
308369	5-, 10-, and 15-Gallon Pressure Tanks, Instructions-Parts List
Heated Platen Manuals	
332511	ExactaBlend AGP Advanced Glazing Proportioner - Heated Platen Kit, Kit Instructions
Reference Manuals	
3A1244	Graco Control Architecture™ Module Programming
Valve Manuals	
313342	Dosing Valve, Instructions-Parts

Models

Base Machines

Part No.	Chemical Industry	Description	Ratio (by Weight)	Maximum Working Pressure psi (MPa, bar)
25E001	Silicone	AGP-S100 System, 5 gallon/5 gallon (20 liter/20 liter) machine	1:1	**MD2:** 3000 (21, 207) **Ultra-lite with flexible hose mixer:** 3000 (21, 207) **Ultra-lite with Tri-core mixer:** 4000 (28, 276)
24R809		AGP-S100 System, 55 gallon/5 gallon (200 liter/20 liter) machine with boom	6:1 to 14:1	
24R810		AGP-S100 System, 55 gallon/5 gallon (200 liter/20 liter) machine		
24R811	Urethane*	AGP-U100 System, 55 gallon/5 gallon (200 liter/20 liter) machine with boom		
24R812		AGP-U100 System, 55 gallon/5 gallon (200 liter/20 liter) machine		
24R813		AGP-U100 System, 55 gallon/5 gallon (200 liter/20 liter) machine with boom and pressure pot		
24R814		AGP-U100 System, 55 gallon/5 gallon (200 liter/20 liter) machine with pressure pot		
24R815	Polysulfide	AGP-P100 System, 55 gallon/5 gallon (200 liter/20 liter) machine with boom		
24R816		AGP-P100 System, 55 gallon/5 gallon (200 liter/20 liter) machine		

* *An agitator is recommended for urethane applications utilizing a pressure pot. Set the agitator to 25-50 rpm.*

Hose Kits

Part No.	Hose Kit Reference No.	Base Hose in. (cm)	Catalyst Hose 1 in. (cm)	Catalyst Hose 2 in. (cm)	Catalyst Hose 3 in. (cm)
24R832	#1	5/8 x 120 (1.6 x 305)	1/8 x 60 (0.3 x 152)	1/8 x 60 (0.3 x 152)	NA
24R833	#2		1/4 x 60 (0.6 x 152)	1/8 x 60 (0.3 x 152)	NA
24R834	#3		1/4 x 60 (0.6 x 152)	1/4 x 60 (0.6 x 152)	NA
24T092	#4		3/8 x 60 (1.0 x 152)	1/4 x 60 (0.6 x 152)	NA
24T094	#6		1/2 x 60 (1.3 x 152)	3/8 x 60 (1.0 x 152)	NA
24U253	#7		3/32 x 60 (0.2 x 152)	3/32 x 60 (0.2 x 152)	NA
24T093	#5		1/8 x 60 (0.3 x 152)	3/32 x 60 (0.2 x 152)	NA
24X094	#8		1/4 x 120 (0.6 x 305)	NA	NA
25A426	#9	3/4 x 53 (1.9 x 135) + 5/8 x 120 (1.6 x 305)	3/32 x 180 (0.2 x 457)	NA	NA
25C238	#10	5/8 x 120 (1.6 x 305)	3/8 x 60 (1.0 x 152)	1/8 x 60 (0.3 x 152)	NA
25C239	#11	3/4 x 53 (1.9 x 135) + 5/8 x 120 (1.6 x 305)	1/4 x 60 (0.6 x 152)	1/4 x 60 (0.6 x 152)	1/4 x 60 (0.6 x 152)
25C240	#12		1/4 x 60 (0.6 x 152)	1/4 x 60 (0.6 x 152)	1/8 x 60 (0.3 x 152)

Dispense Valves

Part No.	Description
24P217	MD2 dispense valve with handle
24P223	Ultra-lite 6000 with 36 element flexible hose mixer
24P221	Ultra-lite 6000 with 36 element Tri-core mixer

Warnings

The following warnings are for the setup, use, grounding, maintenance, and repair of this equipment. The exclamation point symbol alerts you to a general warning and the hazard symbols refer to procedure-specific risks. When these symbols appear in the body of this manual, refer back to these Warnings. Product-specific hazard symbols and warnings not covered in this section may appear throughout the body of this manual where applicable.

⚠WARNING

ELECTRIC SHOCK HAZARD

This equipment must be grounded. Improper grounding, setup, or usage of the system can cause electric shock.

- Turn off and disconnect power cord before servicing equipment.
- Connect only to grounded electrical outlets.
- Use only 3-wire extension cords.
- Ensure ground prongs are intact on power and extension cords.
- Do not expose to rain. Store indoors

SKIN INJECTION HAZARD

High-pressure fluid from dispensing device, hose leaks, or ruptured components will pierce skin. This may look like just a cut, but it is a serious injury that can result in amputation. **Get immediate surgical treatment.**

- Do not point dispensing device at anyone or at any part of the body.
- Do not put your hand over the fluid outlet.
- Do not stop or deflect leaks with your hand, body, glove, or rag.
- Follow the **Pressure Relief Procedure** when you stop dispensing and before cleaning, checking, or servicing equipment.
- Tighten all fluid connections before operating the equipment.
- Check hoses and couplings daily. Replace worn or damaged parts immediately.

MOVING PARTS HAZARD

Moving parts can pinch, cut or amputate fingers and other body parts.

- Keep clear of moving parts.
- Do not operate equipment with protective guards or covers removed.
- Pressurized equipment can start without warning. Before checking, moving, or servicing equipment, follow the **Pressure Relief Procedure** and disconnect all power sources.

⚠WARNING

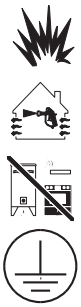

FIRE AND EXPLOSION HAZARD

Flammable fumes, such as solvent and paint fumes, in **work area** can ignite or explode. To help prevent fire and explosion:

- Use equipment only in well ventilated area.
- Eliminate all ignition sources; such as pilot lights, cigarettes, portable electric lamps, and plastic drop cloths (potential static arc).
- Keep work area free of debris, including solvent, rags and gasoline.
- Do not plug or unplug power cords, or turn power or light switches on or off when flammable fumes are present.
- Ground all equipment in the work area. See **Grounding** instructions.
- Use only grounded hoses.
- Hold gun firmly to side of grounded pail when triggering into pail. Do not use pail liners unless they are antistatic or conductive.
- **Stop operation immediately** if static sparking occurs or you feel a shock**.** Do not use equipment until you identify and correct the problem.
- Keep a working fire extinguisher in the work area.

EQUIPMENT MISUSE HAZARD

Misuse can cause death or serious injury.

- Do not operate the unit when fatigued or under the influence of drugs or alcohol.
- Do not exceed the maximum working pressure or temperature rating of the lowest rated system component. See **Technical Data** in all equipment manuals.
- Use fluids and solvents that are compatible with equipment wetted parts. See Technical Data in all equipment manuals. Read fluid and solvent manufacturer's warnings. For complete information about your material, request MSDS from distributor or retailer.
- Do not leave the work area while equipment is energized or under pressure.
- Turn off all equipment and follow the **Pressure Relief Procedure** when equipment is not in use.
- Check equipment daily. Repair or replace worn or damaged parts immediately with genuine manufacturer's replacement parts only.
- Do not alter or modify equipment. Alterations or modifications may void agency approvals and create safety hazards.
- Make sure all equipment is rated and approved for the environment in which you are using it.
- Use equipment only for its intended purpose. Call your distributor for information.
- Route hoses and cables away from traffic areas, sharp edges, moving parts, and hot surfaces.
- Do not kink or over bend hoses or use hoses to pull equipment.
- Keep children and animals away from work area.
- Comply with all applicable safety regulations.

TOXIC FLUID OR FUMES HAZARD

Toxic fluids or fumes can cause serious injury or death if splashed in the eyes or on skin, inhaled, or swallowed.

- Read MSDSs to know the specific hazards of the fluids you are using.
- Route exhaust away from work area. If diaphragm ruptures, fluid may be exhausted into the air.
- Store hazardous fluid in approved containers, and dispose of it according to applicable guidelines.

PERSONAL PROTECTIVE EQUIPMENT

Wear appropriate protective equipment when in the work area to help prevent serious injury, including eye injury, hearing loss, inhalation of toxic fumes, and burns. This protective equipment includes but is not limited to:

- Protective eyewear, and hearing protection.
- Respirators, protective clothing, and gloves as recommended by the fluid and solvent manufacturer.

⚠WARNING

PRESSURIZED ALUMINUM PARTS HAZARD

Use of fluids that are incompatible with aluminum in pressurized equipment can cause serious chemical reaction and equipment rupture. Failure to follow this warning can result in death, serious injury, or property damage.

- Do not use 1,1,1-trichloroethane, methylene chloride, other halogenated hydrocarbon solvents or fluids containing such solvents.
- Many other fluids may contain chemicals that can react with aluminum. Contact your material supplier for compatibility.

Important Isocyanate (ISO) Information

Isocyanates (ISO) are catalysts used in some two component materials.

Isocyanate Conditions

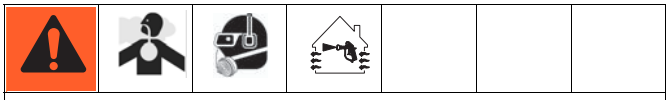

Spraying or dispensing materials containing isocyanates creates potentially harmful mists, vapors, and atomized particulates.

Read material manufacturer's warnings and material MSDS to know specific hazards and precautions related to isocyanates.

Prevent inhalation of isocyanate mists, vapors, and atomized particulates by providing sufficient ventilation in the work area. If sufficient ventilation is not available, a supplied-air respirator is required for everyone in the work area.

To prevent contact with isocyanates, appropriate personal protective equipment, including chemically impermeable gloves, boots, aprons, and goggles, is also required for everyone in the work area.

Material Self-ignition

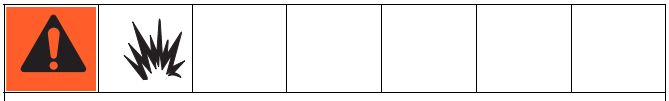

Some materials may become self-igniting if applied too thick. Read material manufacturer's warnings and material MSDS.

Keep Components A and B Separate

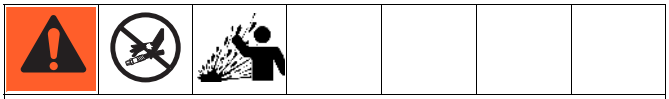

Cross-contamination can result in cured material in fluid lines which could cause serious injury or damage equipment. To prevent cross-contamination:

- **Never** interchange component A and component B wetted parts.
- Never use solvent on one side if it has been contaminated from the other side.

Moisture Sensitivity of Isocyanates

Exposure to moisture (such as humidity) will cause ISO to partially cure; forming small, hard, abrasive crystals, which become suspended in the fluid. Eventually a film will form on the surface and the ISO will begin to gel, increasing in viscosity.

NOTICE

Partially cured ISO will reduce performance and the life of all wetted parts.

- Always use a sealed container with a desiccant dryer in the vent, or a nitrogen atmosphere. **Never** store ISO in an open container.
- Keep the ISO pump wet cup or reservoir (if installed) filled with appropriate lubricant. The lubricant creates a barrier between the ISO and the atmosphere.
- Use only moisture-proof hoses compatible with ISO.
- Never use reclaimed solvents, which may contain moisture. Always keep solvent containers closed when not in use.
- Always lubricate threaded parts with an appropriate lubricant when reassembling.

NOTE: The amount of film formation and rate of crystallization varies depending on the blend of ISO, the humidity, and the temperature.

Changing Materials

NOTICE

Changing the material types used in your equipment requires special attention to avoid equipment damage and downtime.

- When changing materials, flush the equipment multiple times to ensure it is thoroughly clean.
- Always clean the fluid inlet strainers after flushing.
- Check with your material manufacturer for chemical compatibility.

Component Identification

S100 Models - 55 Gallon/5 Gallon (200 Liter/20 Liter)

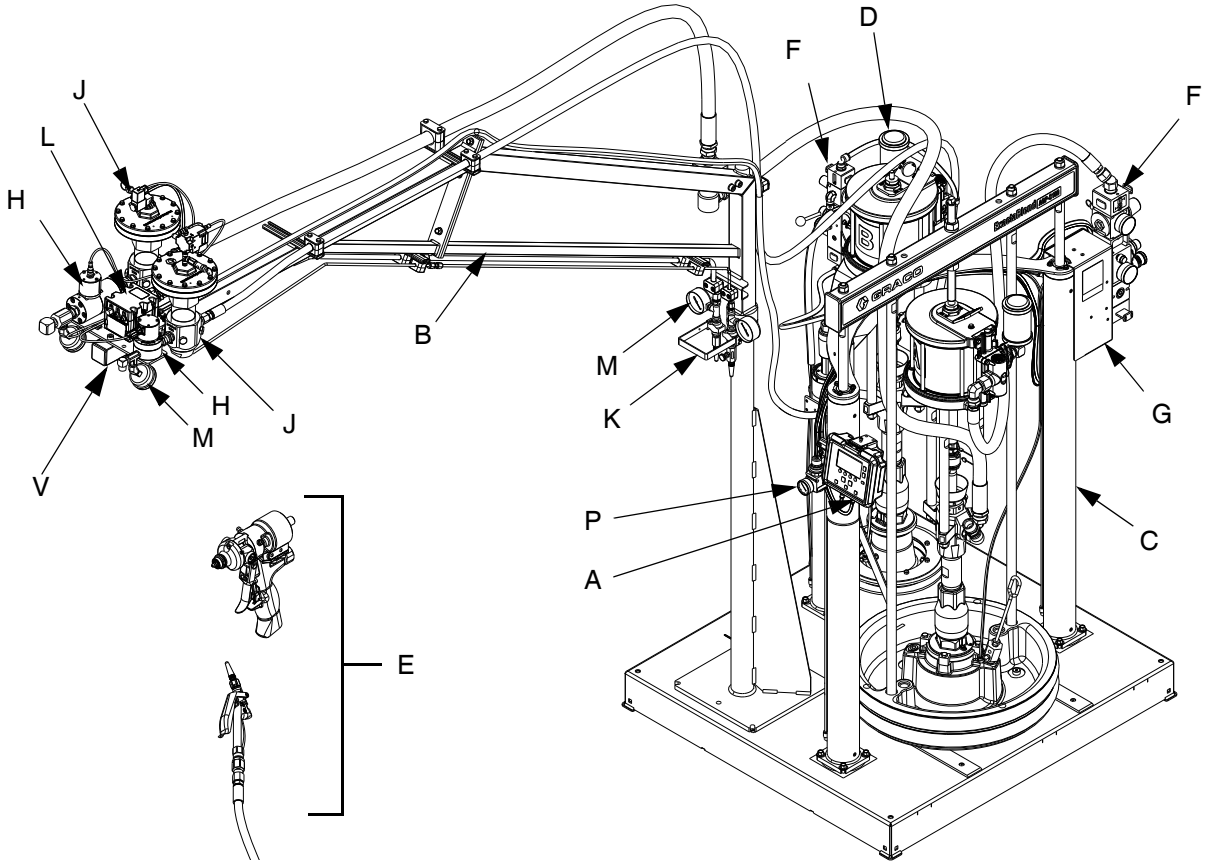

FIG. 1: S100 55/5 Gallon Models

Key:

- **A Display Module (DM)**
- **B Boom✿**
- **C Ram - Base (A) Chemical***
- **D Ram - Catalyst (B) Chemical***
- **E Dispense Valve***
- **F Integrated Air Controls**
- **G Electrical Enclosure**
- **H Flow Meters***
- **J Fluid Regulator***
- **K Calibration Check Assembly✿**
- **L Fluid Control Module (FCM)**
- **M Material Pressure Gauges**
- **N Catalyst (B) Filter✿**
- **P Fluid Regulator Adjustment**
  Controls the pressure to the base (A) fluid regulator.
- **R Pressure Pot (U100 only)***
- **S Air Motor (U100 only)***
- **T Displacement Pump (U100 only)***
- **U Dosing Valve (P100 only)***
- **V Light Tower**

** Refer to specific component manual for more detailed information.*

✿ *Where applicable.*

S100 Model - 5 Gallon/5Gallon (20 Liter/20 Liter)

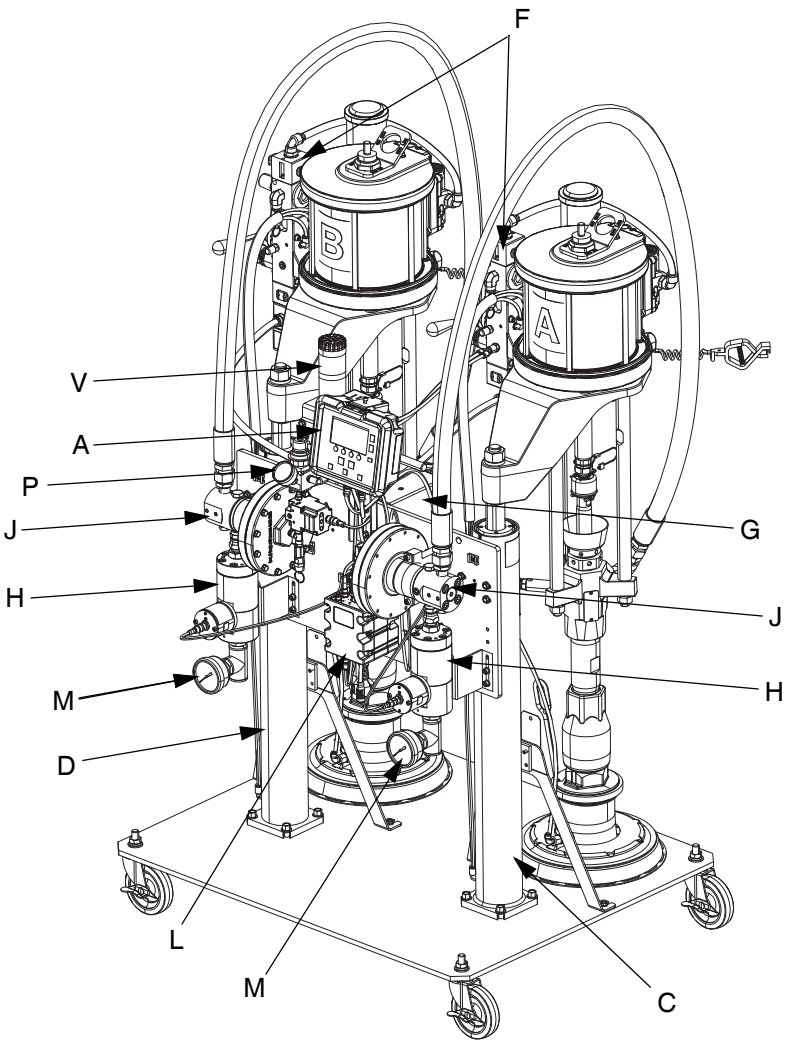

FIG. 2: S100 5/5 Gallon Models

NOTE: Refer to key found on page 10.

U100 Models

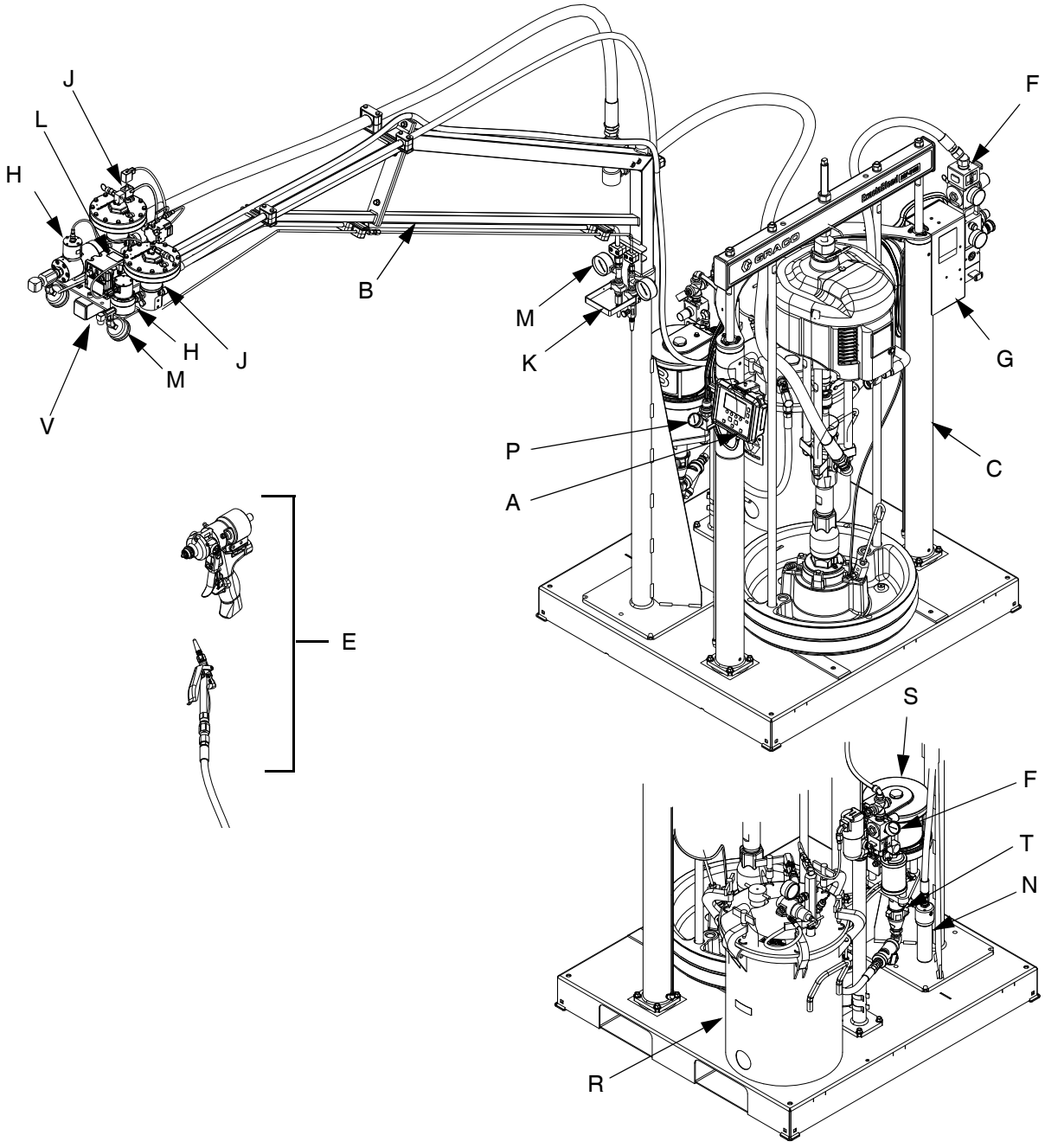

FIG. 3: U100 Models

NOTE: Refer to key found on page 10.

P100 Models

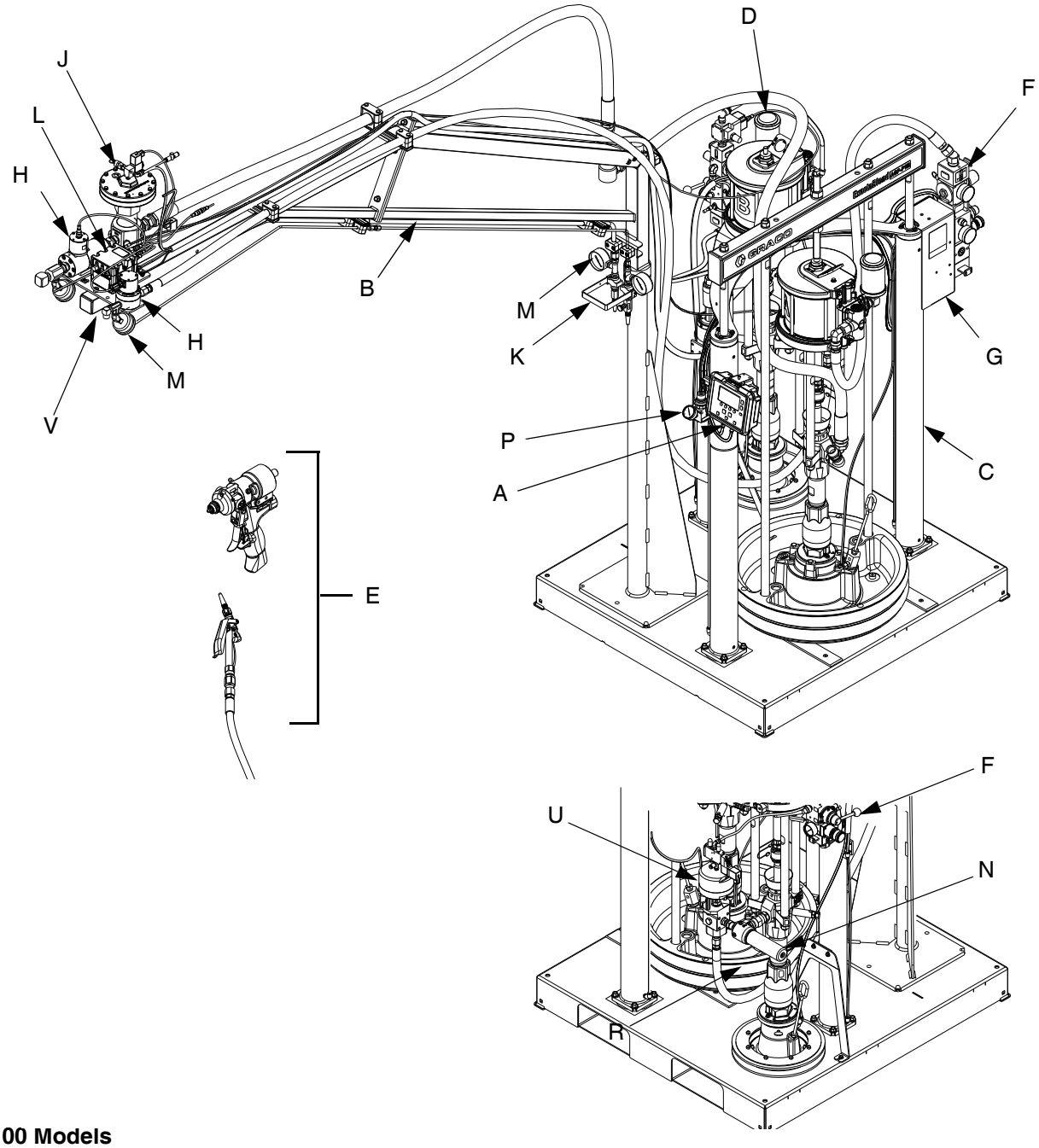

FIG. 4: U100 Models

NOTE: Refer to key found on page 10.

Electrical Enclosure

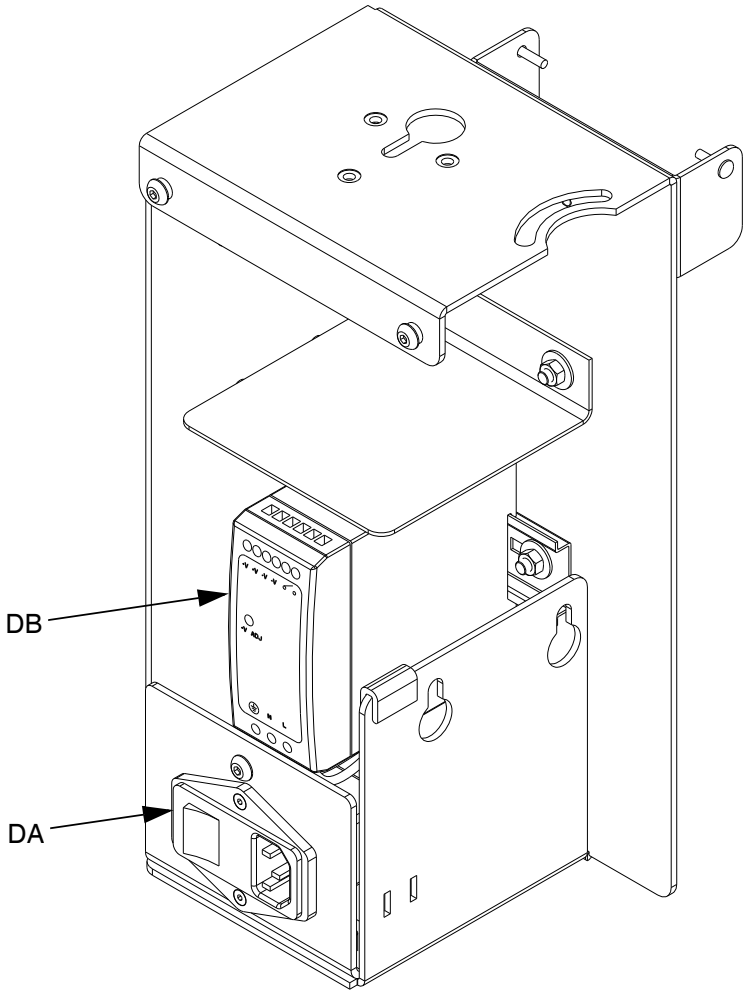

FIG. 5: Electrical Enclosure

Key:

DA Power Switch
Turns electrical power on or off.

DB 24VDC Power Supply
Converts input power to 24 VDC.

Display Module (DM)

User Interface

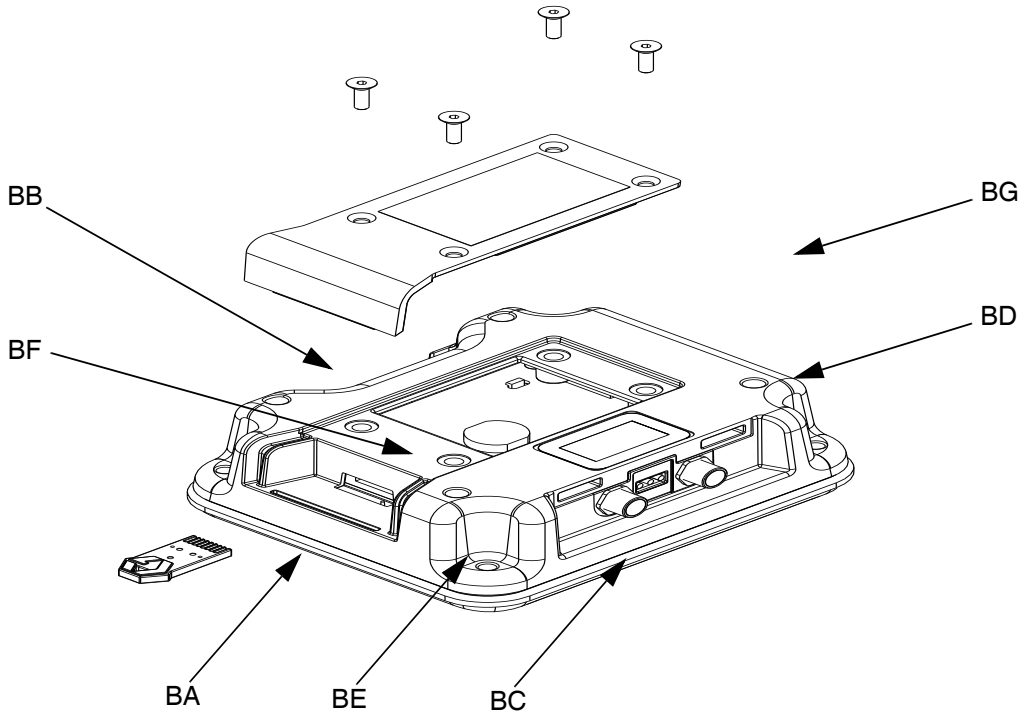

FIG. 6: DM Component Identification - Front

Key:

BA System Enable/ Disable
Enables/disables the system. When the system is disabled, dispense operation is disabled.

BB Soft Keys
Defined by application using the DM.

BC Cancel
Cancel a selection or number entry while in the process of entering a number or making a selection.

BD Enter
Acknowledge changing a value or making a selection.

BE Lock/Setup
Toggle between run and setup screens. If setup screens are password protected, button toggles between run and password entry screen.

BF Field Selection
Navigate to another field when the DM is in setup mode. These buttons have no function when the DM is in run mode.

BG Increase / Decrease / Field Selection
Increase or decrease the selected value. Navigate to another field.

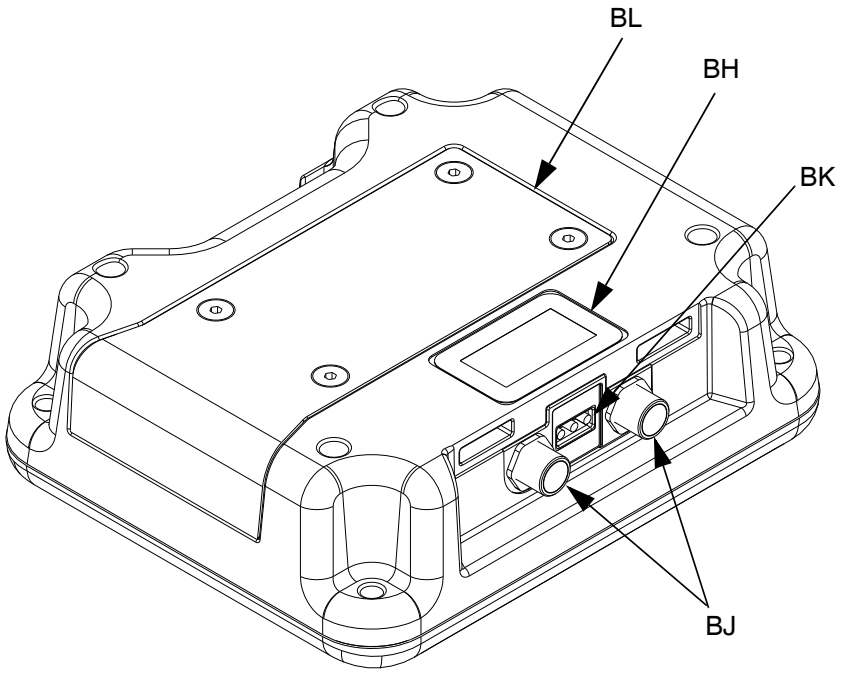

FIG. 7: DM Component Identification - Rear

BH Model Number
Identification tag for the DM.

BJ CAN Cable Connections
Electrical connection for power and communication to other GCA devices.

BK Module Status LEDs
Visual indicators to show the status of the DM:
Green Solid - Power provided.
Green Off - No power.
Yellow Flashing - Communication with other GCA devices occurring.
Red Solid - Bad DM or machine is in critical status
Red Flashing - Wrong program uploaded.

BL Token/Battery Access Cover
Access cover for token and battery.

Main Display Components

The following figure calls out the navigational, status, and general informational components of each screen.

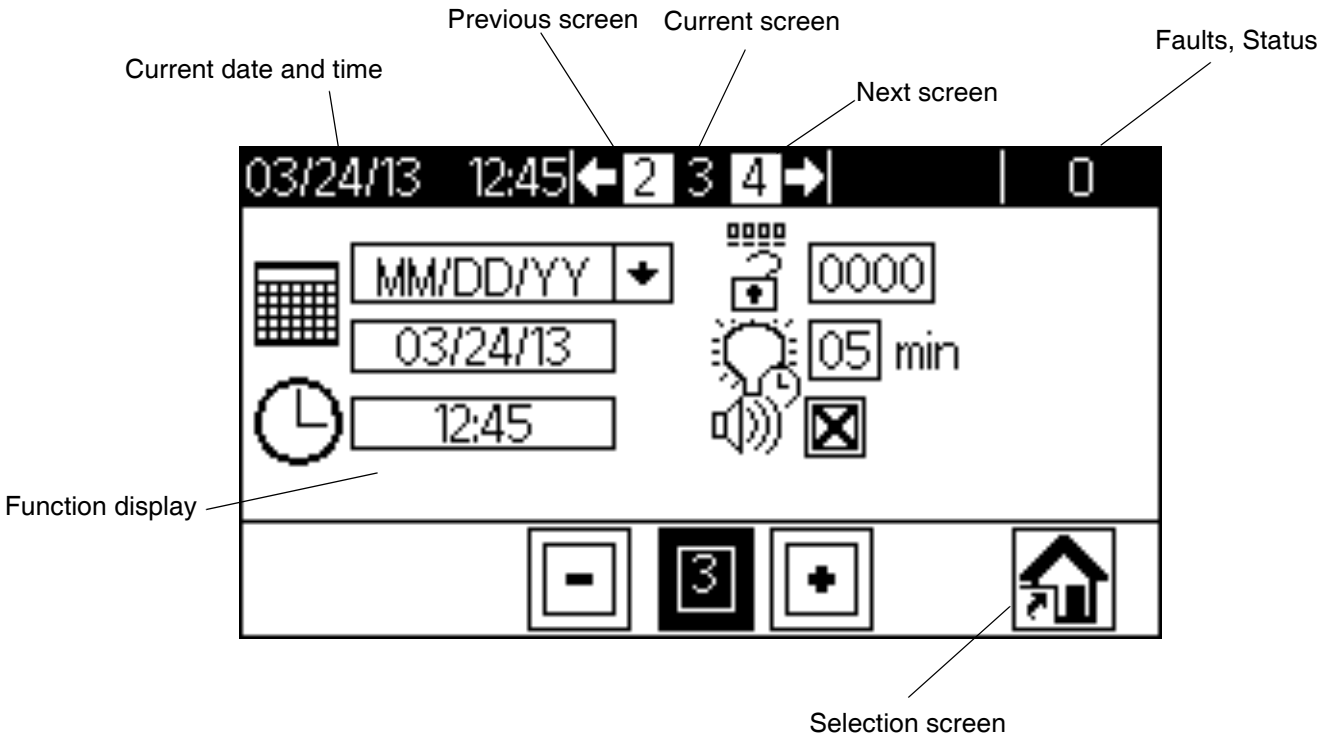

FIG. 8: Main Display Components

DM Screen Navigation Diagram

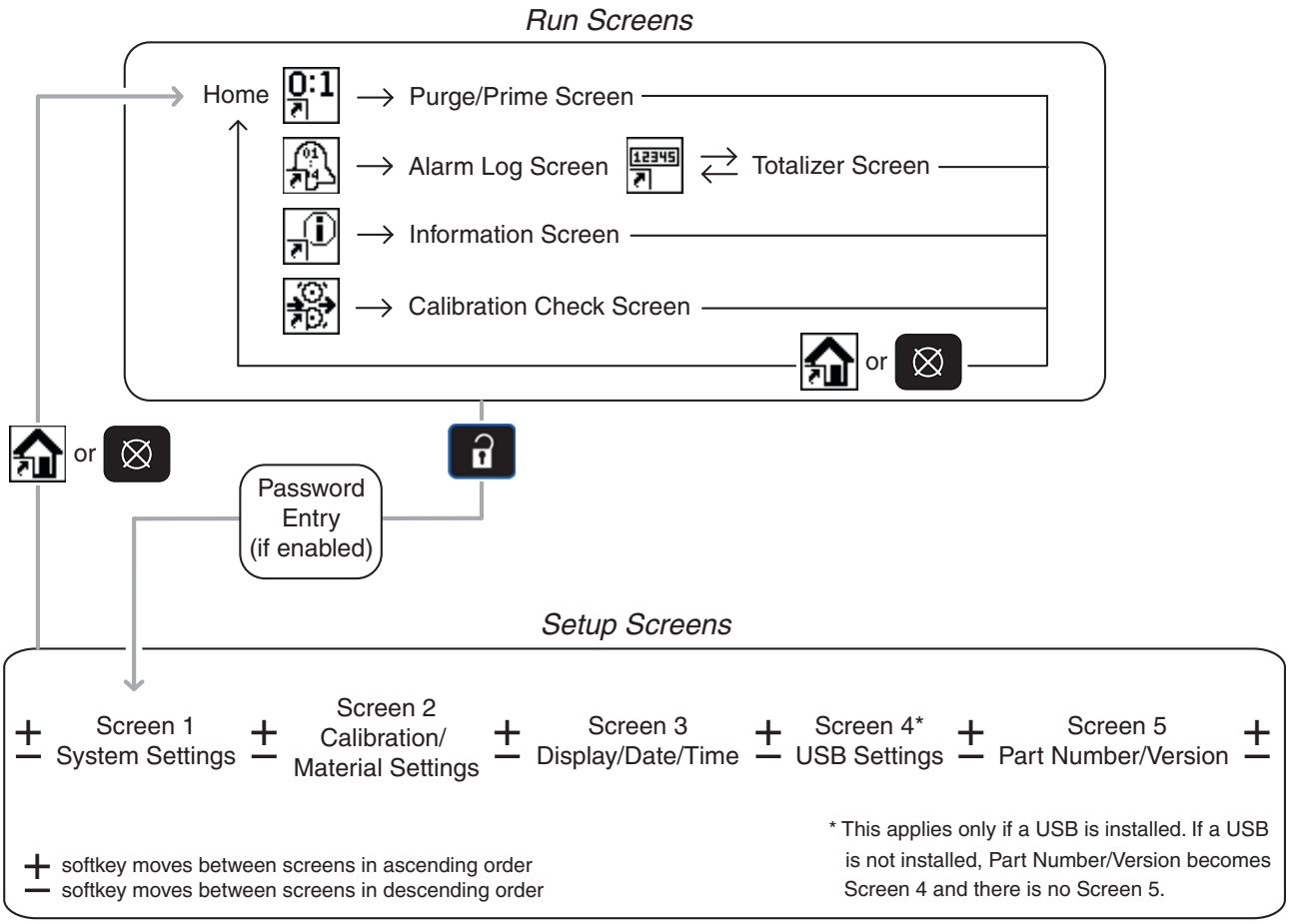

FIG. 9: Screen Navigation Diagram

Integrated Air Controls

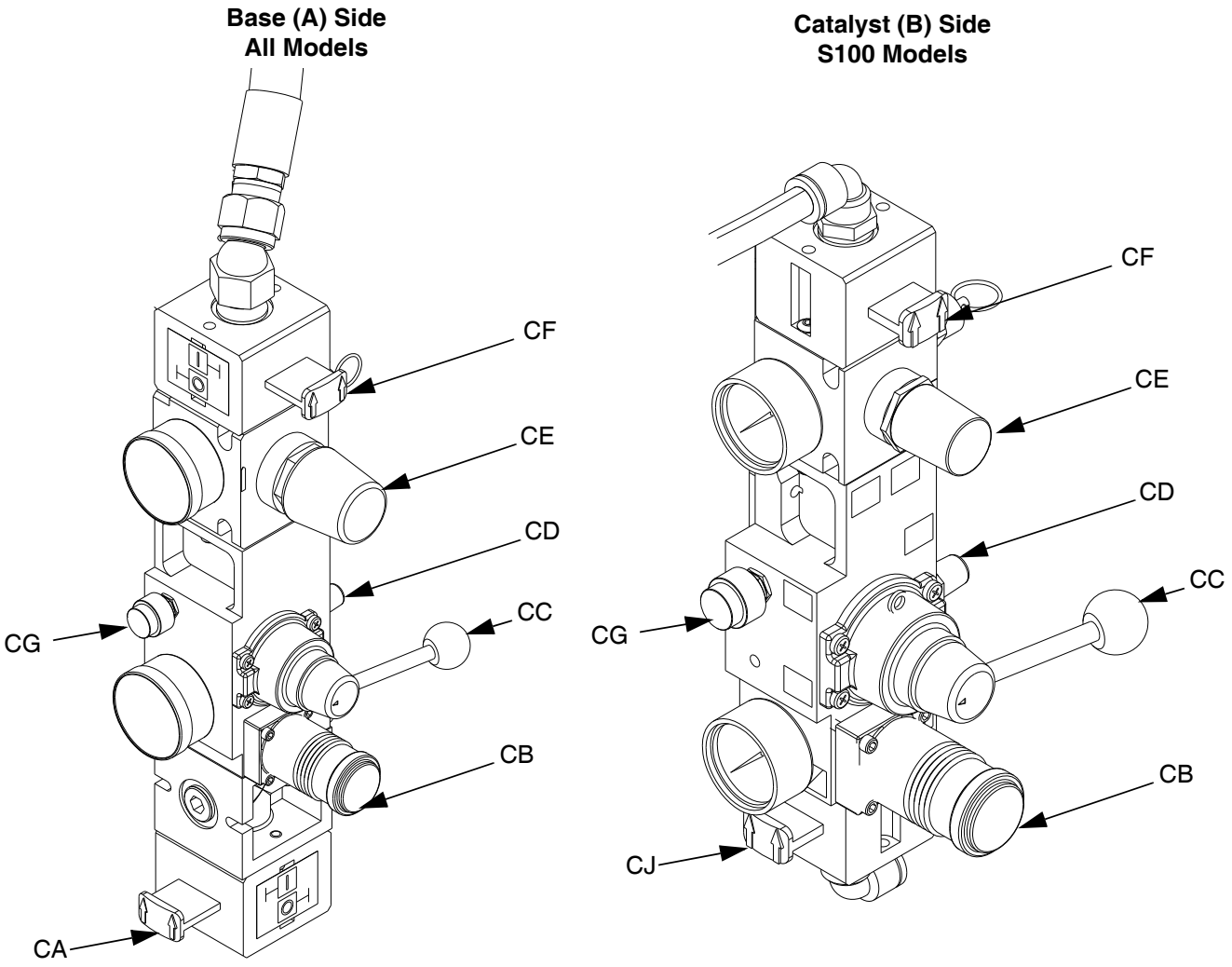

FIG. 10: Integrated Air Controls

Key:

CA Main Air Slider Valve
Turns air on and off to the entire system. When closed, the valve relieves pressure downstream.

CB Ram Air Regulator
Controls the ram up and down pressure and blowoff pressure.

CC Ram Director Valve
Controls the ram direction.

CD Exhaust Port with Muffler

CE Air Motor Regulator
Controls the air pressure to the motor.

CF Air Motor Slider Valve
Turns air on and off to the air motor. When closed, the valve relieves air trapped between it and the motor. Push the valve in to shutoff.

CG Blowoff Button
Turns air on and off to push the platen out of an empty drum.

CJ Catalyst Air Slider Valve
Turns air on and off to the catalyst motor only. When closed, the valve relieves pressure down stream.

CK Voltage to Pneumatic Regulator (V/P)
Electrically controlled air regulator.

Catalyst (B) Side
U100 Models

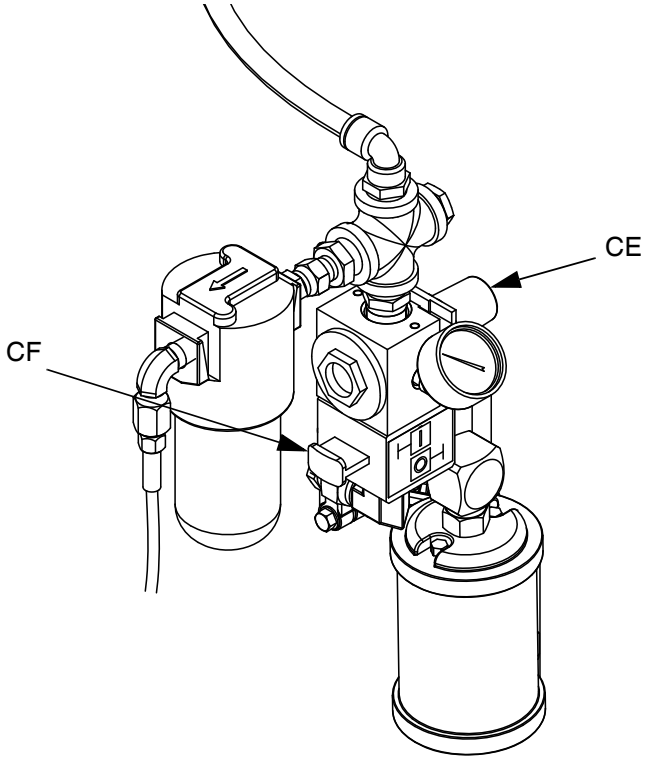

Catalyst (B) Side
P100 Models

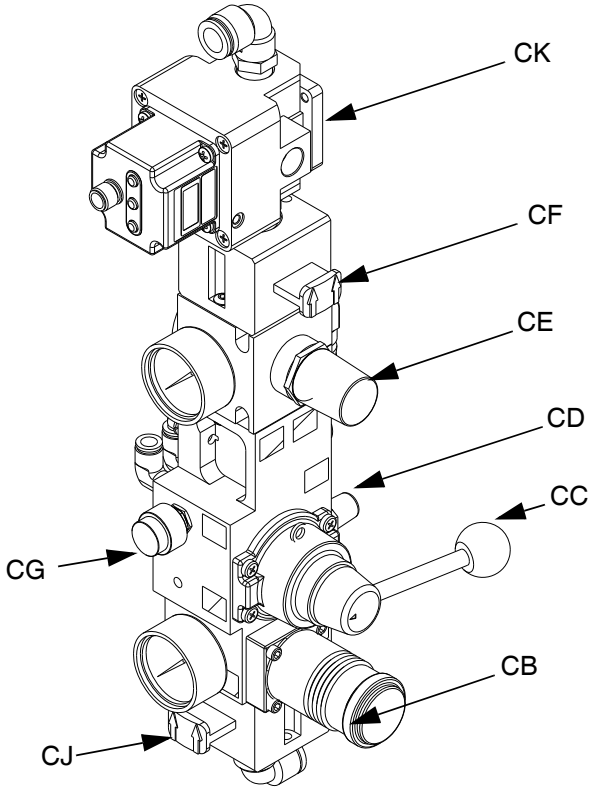

FIG. 11: Integrated Air Controls

NOTE: Refer to key found on page 19.

Fluid Control Module (FCM)

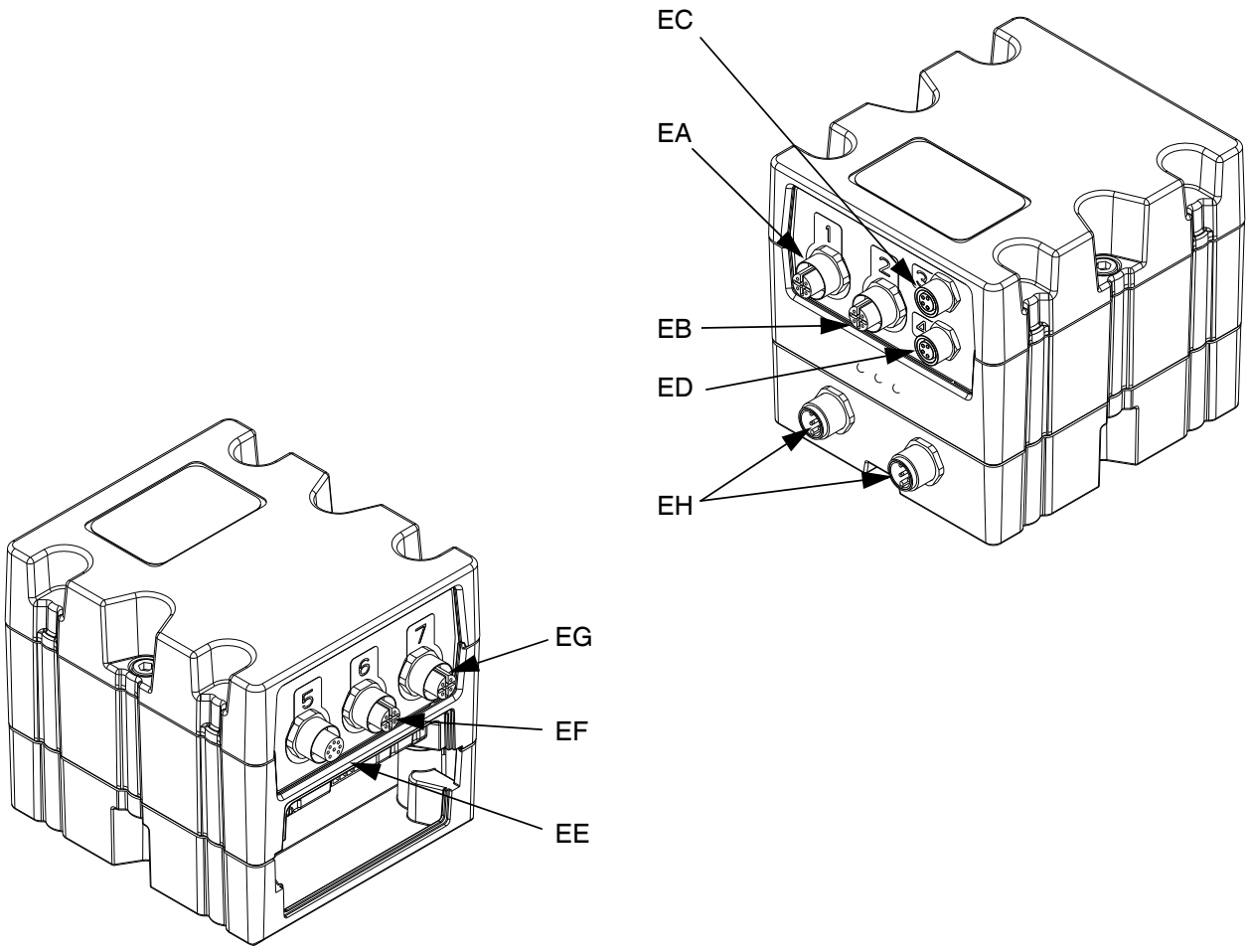

FIG. 12: FCM

Key:

EA Port 1 - Air Shut off Valve
Controls the air to the base (A) material regulator.
Port 1 - Low Level Sensors (Optional)
Low level input for the both materials. Refer to **Accessories and Kits**, page 61, for more details. Includes splitter.

EB Port 2 - Flow Meters
Base (A) and Catalyst (B) flow meter input. Includes splitter

EC Port 3 - Solenoid Valve (P100 only)
To open and close the dosing valve.

ED Port 4 - Voltage to Pneumatic (V/P) Regulator
Controls the air to the catalyst (B) material regulator.

EE Port 5 - Audible Light Tower
Visual and audible indicator of machine status. Refer to page 21 for more details.

EF Port 6 - Not Used

EG Port 7 - Not Used

EH CAN Connection
Supplies power and communication to GCA components.

Light Tower 24R824

Visual and audible indicator of machine status.

Status	Description
Red - Solid	An error has occurred and requires maintenance.
Red and Green - Solid	Allows a dispense but notifies the user of an uncleared error (e.g. low level).
Green - Solid	Machine is ready to dispense
Green - Flashing	Machine is okay. Gel timer has expired.

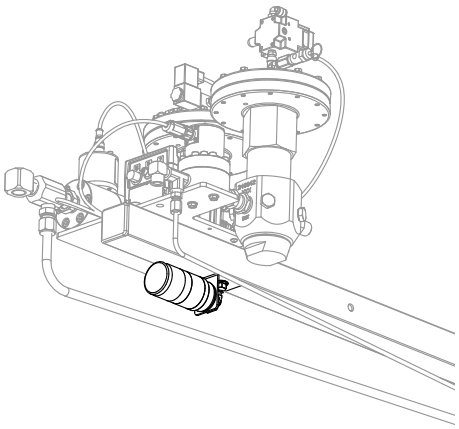

FIG. 13: Light Tower

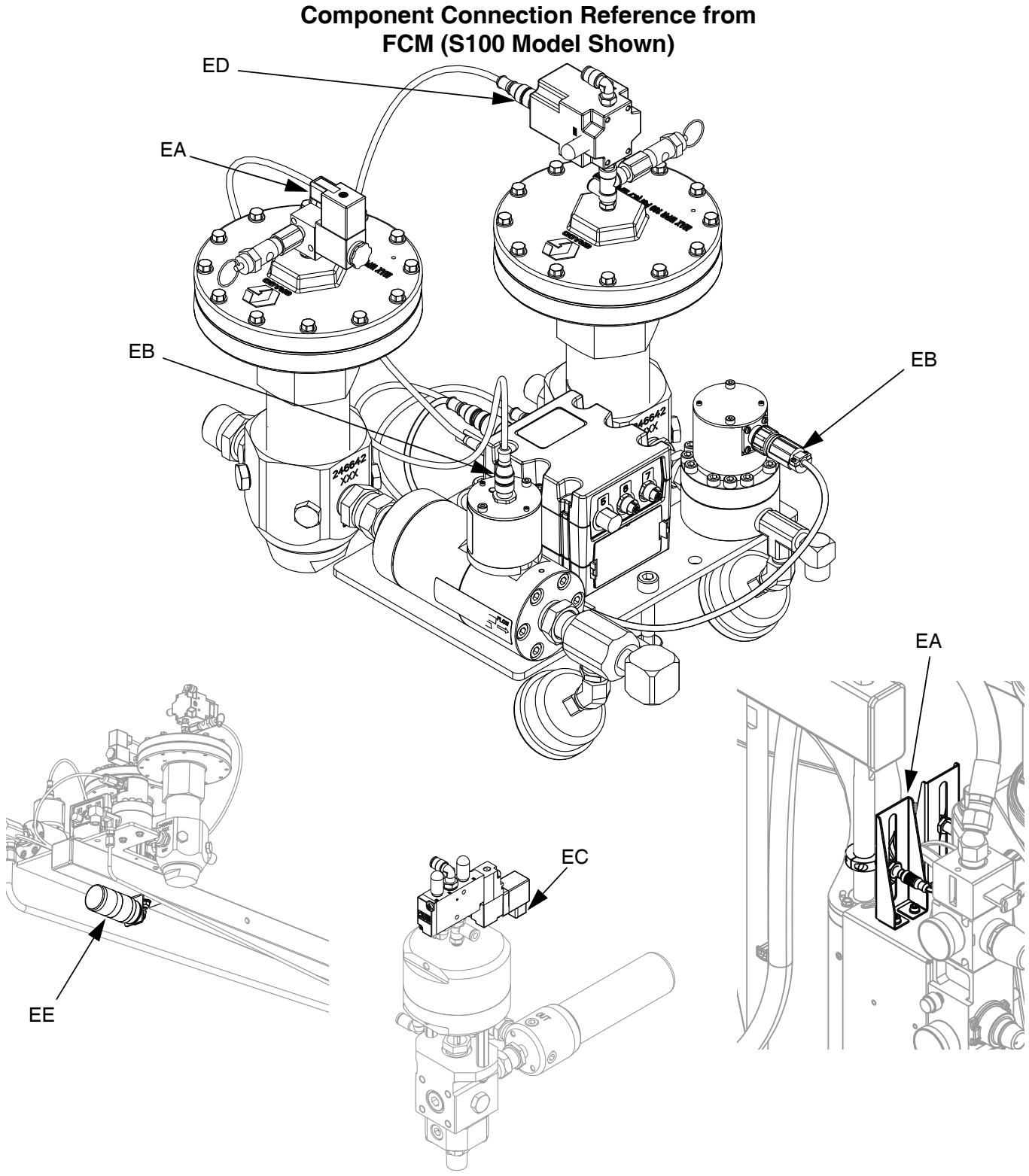

FIG. 14: Component Connection Reference from FCM

Installation

NOTICE

To avoid flow meter malfunction, do not use PTFE tape on NPT threads. Only apply pipe sealant, Loctite® #565 or equivalent, to all NPT threads when installing.

1. Locate the Machine Base.

Locate the machine on a level surface. Refer to **Dimensions**, page 78, for space requirements.

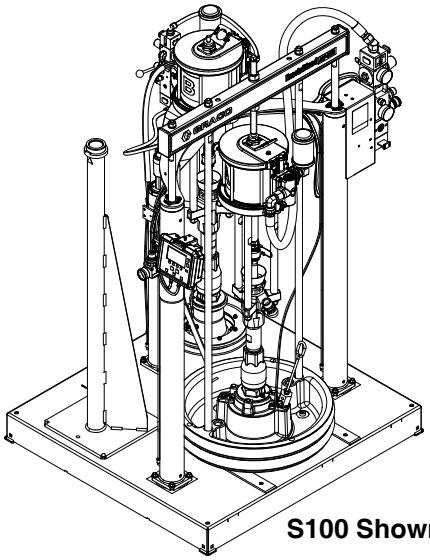

S100 Shown

2. Assemble the Hose Clamps and Swivel Assembly onto the Boom Base.

a. Torque the swivel assembly fasteners to 24 ft-lb (33 N•m).

b. Hand tighten all hose clamps.

NOTE: Refer to steps 9 and 11 for visual clarity of hose clamp placement.

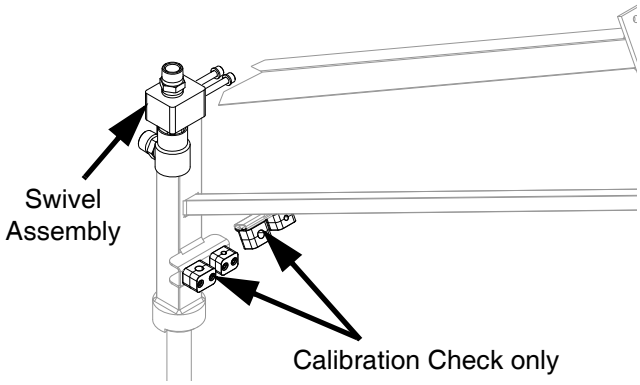

3. Install the Boom Base onto the Machine Base.

Slide the boom base into the machine base mast.

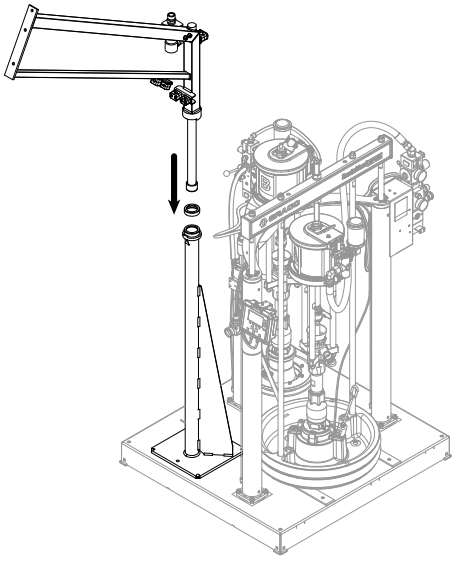

4. Assemble the Hose Clamps onto the Front Boom Arm.

Hand tighten all hose clamps.

NOTE: Refer to steps 9 and 11 for visual clarity of hose clamp placement.

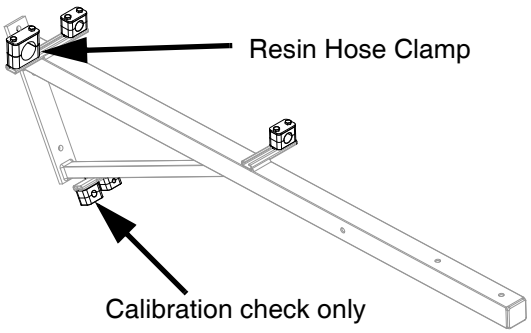

5. Install the Front Boom Arm onto the Boom Base.

Torque all fasteners to 24 ft-lb (33 N•m).

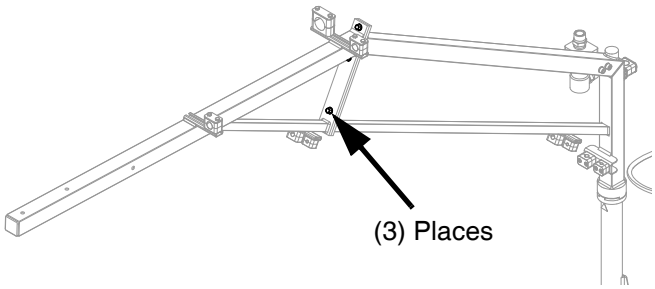

6. Install the Fluid Plate onto the Front Boom Arm.

NOTICE
Injury may occur if the fluid plate is lifted by only one person. Use a hoist, multiple people, or remove the fluid regulators prior to installation.

7. Light Tower Installation

a. Fasten the light tower bracket to the boom assembly. Torque the nut to 24 ft-lb (33 N•m).

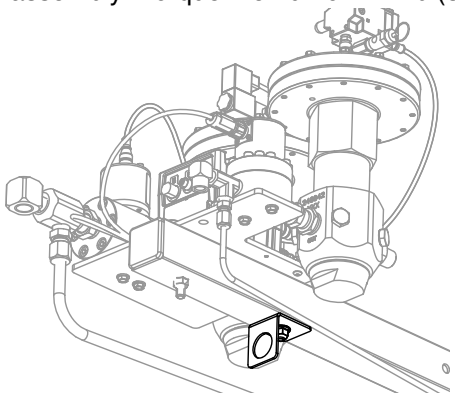

b. Mount the light tower to the bracket. Hand tighten the light tower nut.

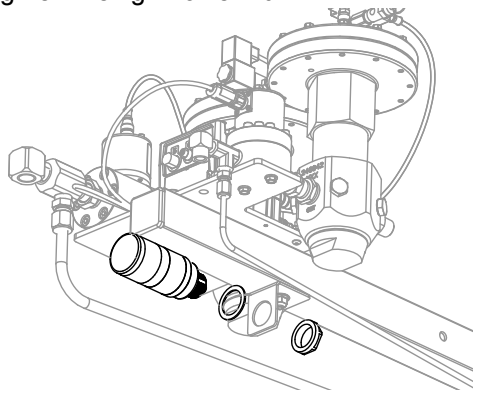

c. Connect the cable from the light tower to port 5 located on the Fluid Control Module (FCM).

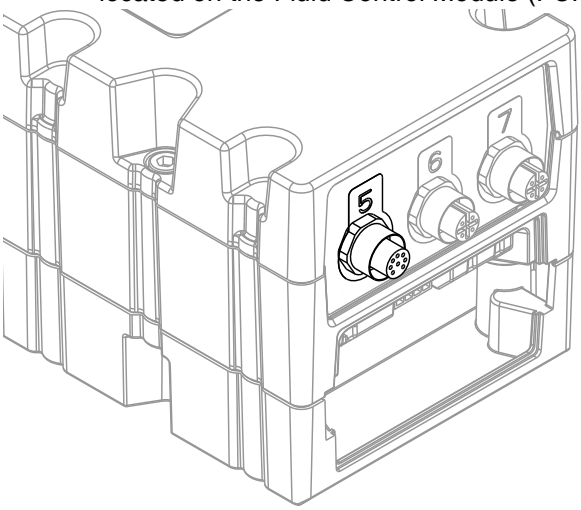

d. Torque the fluid plate fasteners to 24 ft-lb (33 N•m).

e. Install the fluid regulators if removed for installation.

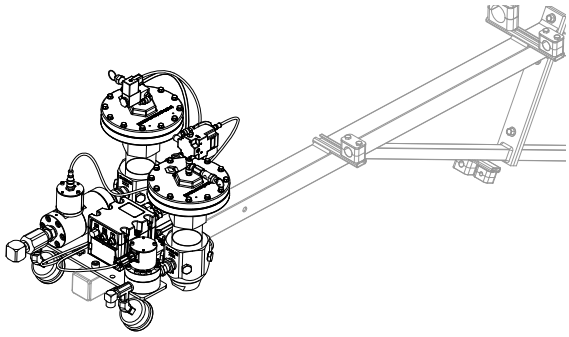

8. <u>Calibration Check Only</u>: Install the Calibration Check Assembly and Material Tubes onto the Boom Assembly.

a. Tighten all fittings to prevent leaking.

b. Tighten all hose clamps to secure material lines.

NOTE: For additional assembly details, refer to the ExactaBlend AGP Advanced Glazing Proportioner - Accessories, Instructions manual.

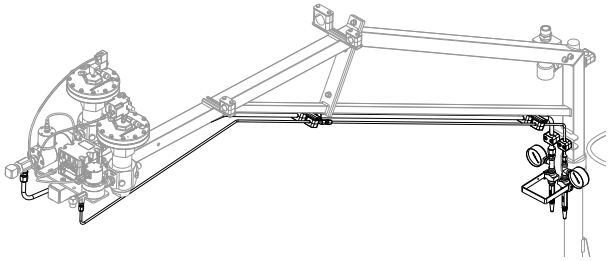

9. Route and Connect the Base (A) Material Hoses.

a. Tighten all fittings to prevent leaking.

b. Tighten all hose clamps to secure material lines.

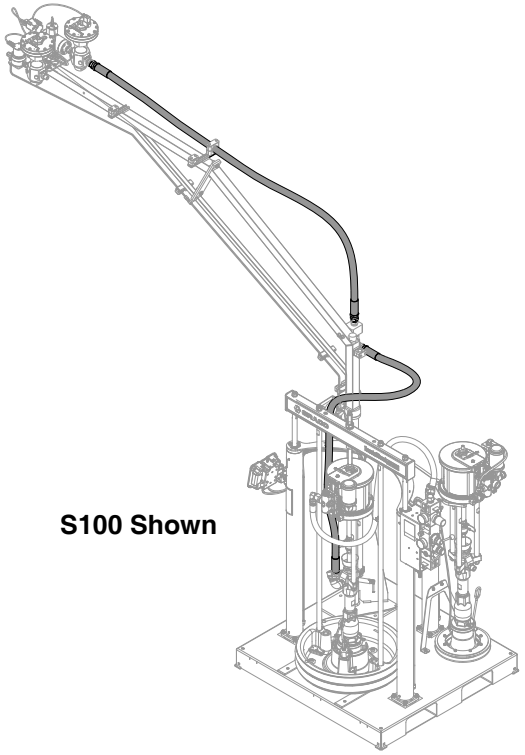

S100 Shown

10. P100 Only: Install the Dosing Valve.

a. Tighten all fittings to prevent leaking.

b. Install the air supply from the catalyst integrated air controls.

c. Connect the solenoid cable from port “3” of the FCM. Refer to **Fluid Control Module (FCM)**, page 21. Allow enough length for lifting the ram out of material container.

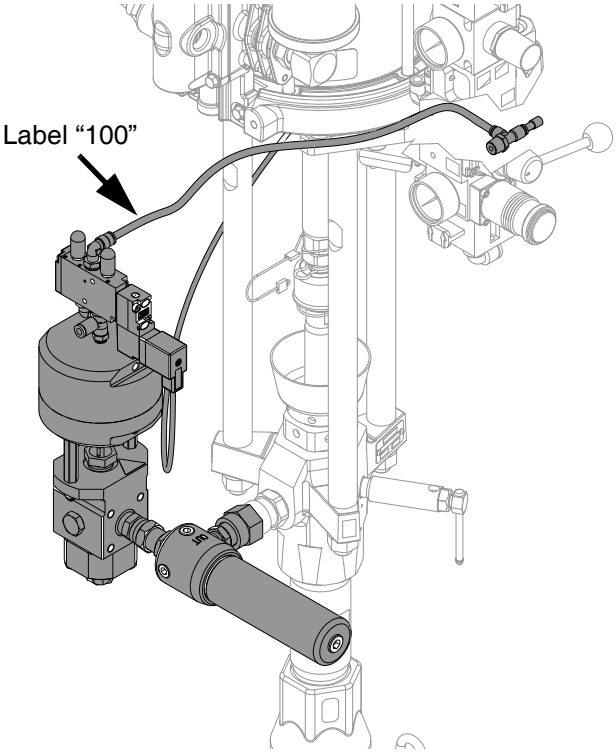

11. Route and Connect the Catalyst (B) Material Hose.

a. Tighten all fittings to prevent leaking.

b. Tighten all hose clamps to secure material lines.

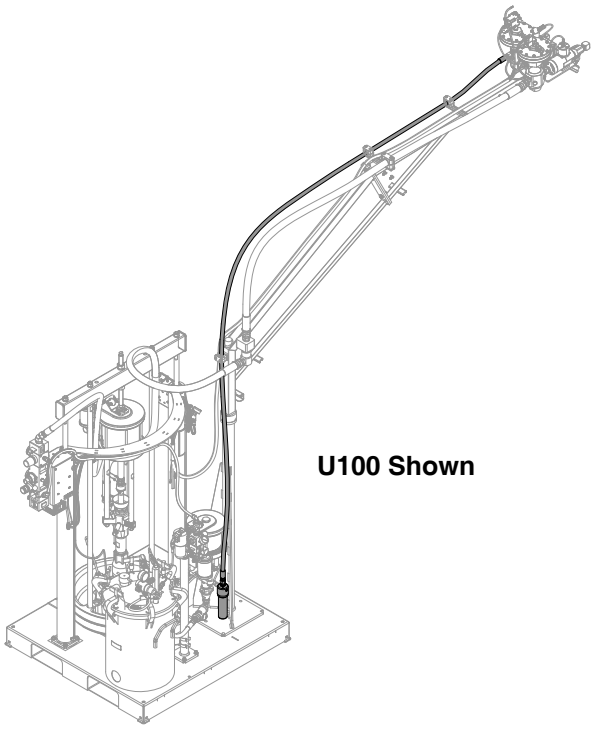

U100 Shown

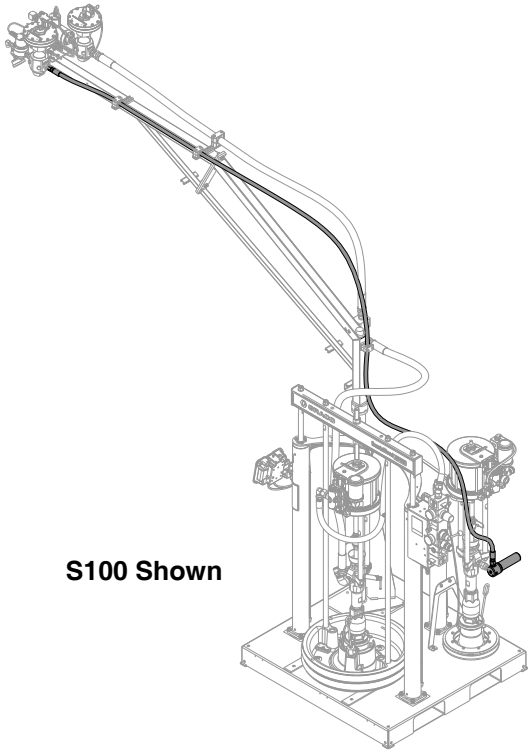

S100 Shown

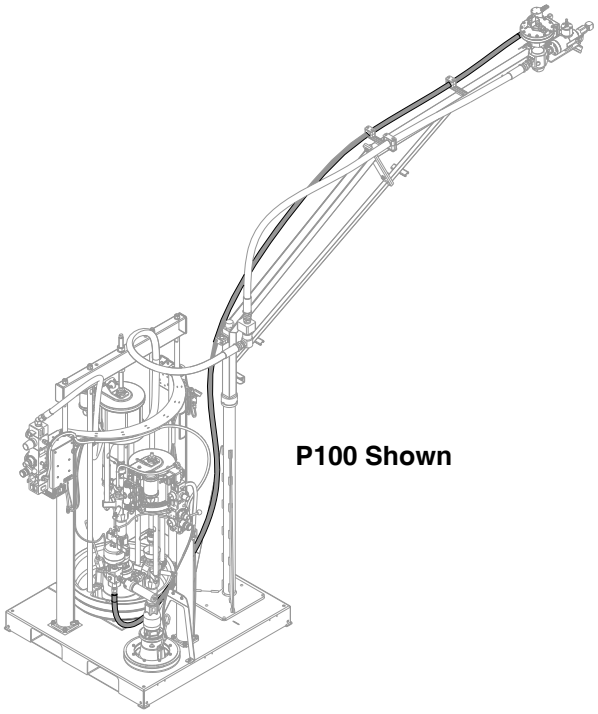

P100 Shown

12.Route and Connect the Air Hoses and Electrical Lines.

Secure the electrical lines to the boom using electrical tape or zip ties.

NOTE: Securing the ground cable to the fluid plate is required for the proper grounding of the machine.

NOTE: S100 and U100 models are shown below. For P100 models, the V/P is located on the catalyst air controls. Refer to **Integrated Air Controls**, page 19.

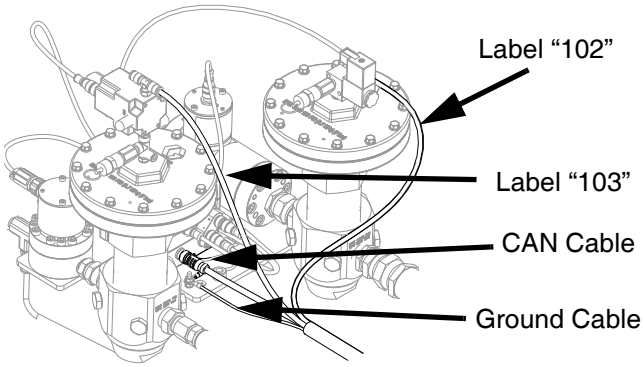

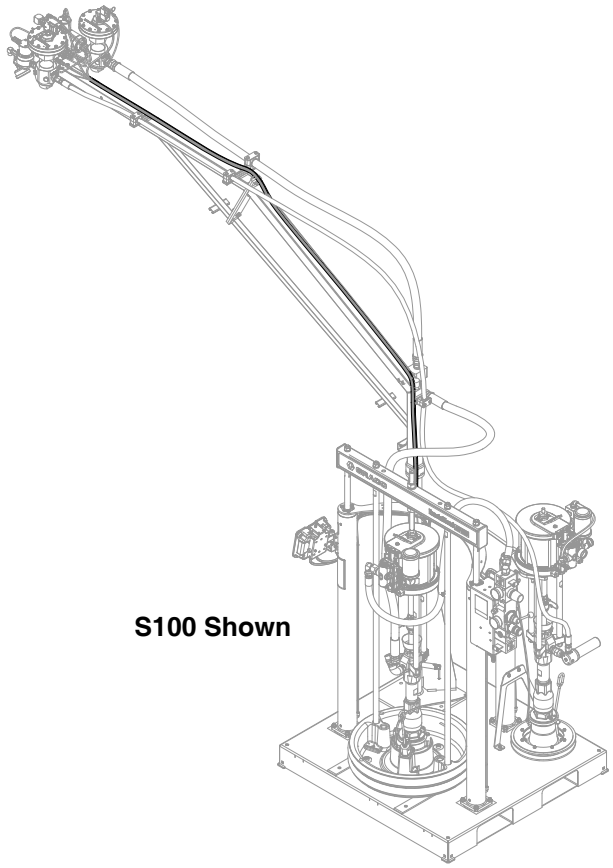

S100 Shown

13.Assemble the Base (A) Material Whip Hose.

Tighten all fittings to prevent leaking.

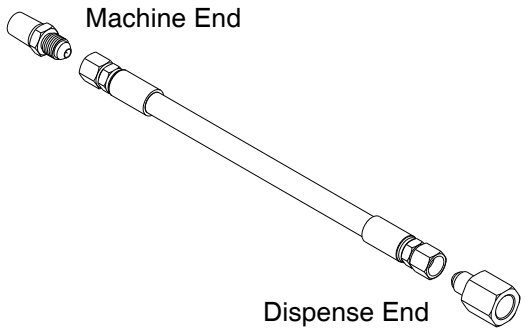

14.Assemble the Catalyst (B) Material Whip Hose.

Refer to PKE 2863 found at http://graco.custhelp.com/app/answers/detail/a_id/2863 or by utilizing the QR code below for recommended hose size configurations, pin sizes, and calibration numbers. Tighten all fittings to prevent leaking.

NOTE: Refer to **Restrictor Kit, 24R804**, page 62, for purchase. Restrictor pin size is for typical applications and are for reference only. It may be necessary to install other pins or configurations to obtain balanced pressures.
#1 = 0.094 in. (2.4 mm) • #2 = 0.098 in. (2.5 mm) • #3 = 0.102 in. (2.6 mm)

NOTE: Refer to **Catalyst (B) Hoses**, page 62, for additional hose sizes available.

a. Select the fluid plate to restrictor housing hose. Install the adapter.

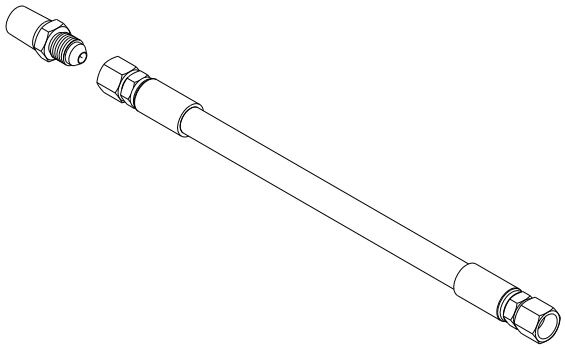

b. Select the restrictor pin or union.
U100 with MD2: Install the union to the fluid plate to restrictor housing hose. If utilizing the restrictor pin assembly, the restrictor pin assembly will be installed in step d.
All other Configurations: Install the restrictor pin assembly or union to the fluid plate to restrictor housing hose.

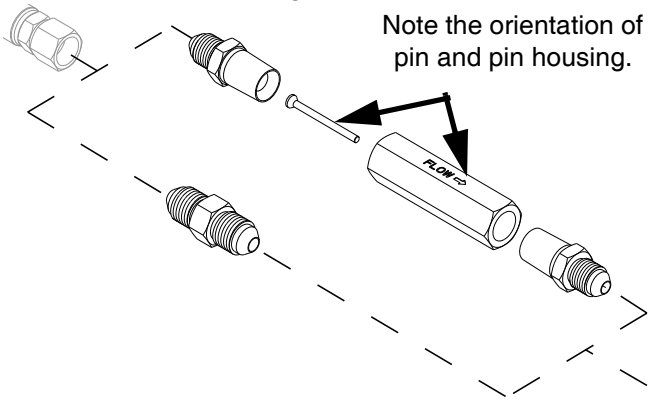

c. Select the restrictor housing to dispense valve hose. Install the restrictor housing to dispense valve hose to the restrictor pin assembly or union.

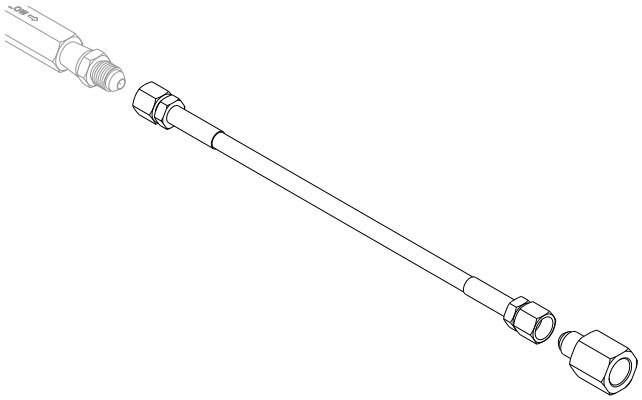

d. **U100 with MD2:** If utilizing the restrictor pin assembly, replace the swivel union found on the MD2 with the restrictor pin assembly.

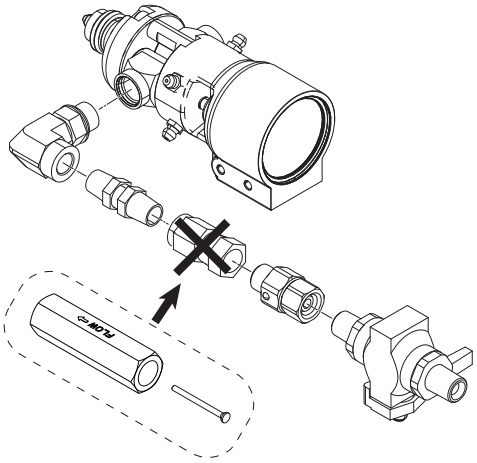

15. Connect the Catalyst (B) and Base (A) Material Whip Hoses to the Fluid Plate.

NOTICE

Damage to the moisture-lok hoses may result in moisture sensitive material to cure within the hose. To avoid machine damage, avoid damaging the protective coating on the moisture-lok hoses.

a. Tighten all fittings to prevent leaking.

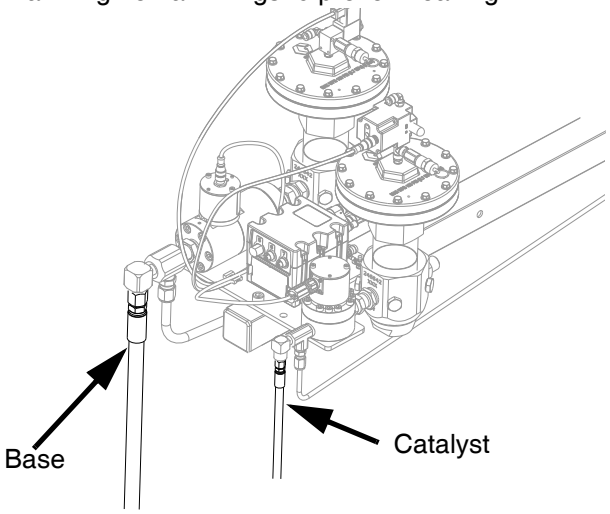

b. Slide protective sleeve over base and catalyst hoses.

c. **MD2:** Tape sleeve 8 in. (20 cm) behind the high volume fitting to allow adequate movement of the gun handle.

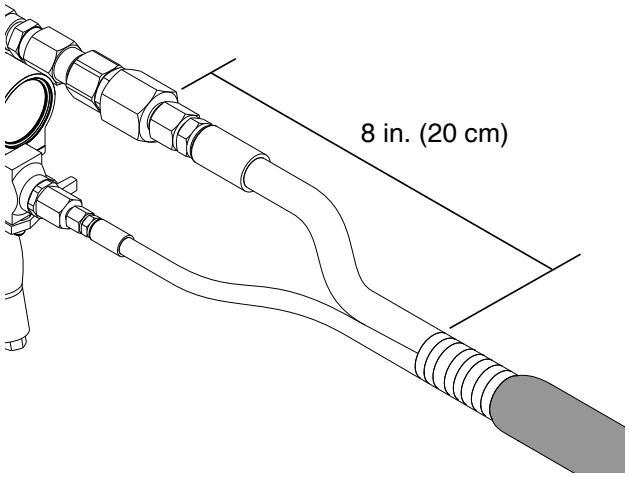

Ultra-Lite: Tape sleeve just behind manifold block.

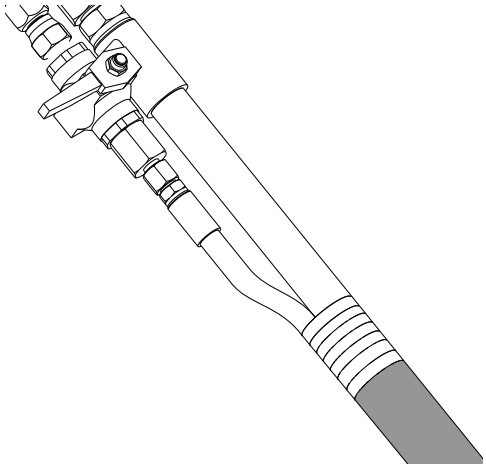

d. Pull the other end of the protective sleeve tightly and secure with electrical tape.

16. MD2 Only: Connect the Air Fitting and Route the Air Hose.

a. Remove the plug located on the catalyst (B) integrated air control.

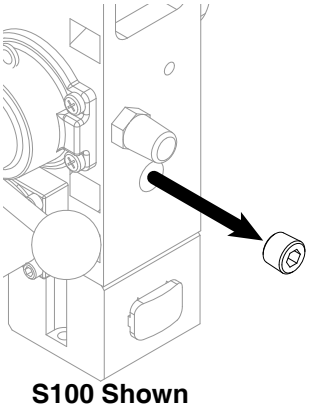

S100 Shown

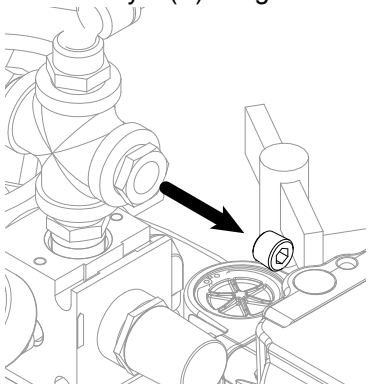

U100 Shown

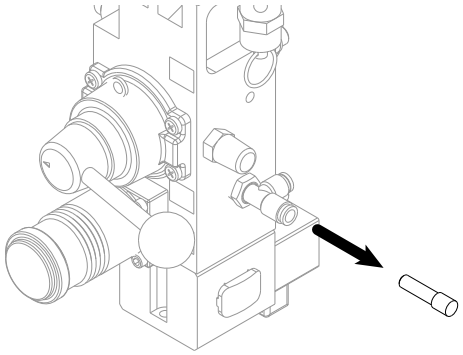

P100 Shown

b. Install the air fitting if required. Use sealant on the threads and tighten to prevent leaking.

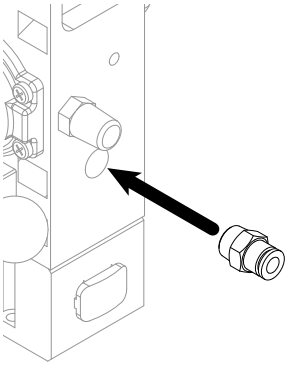

S100 Shown

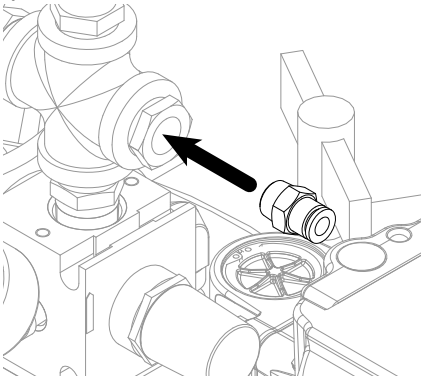

U100 Shown

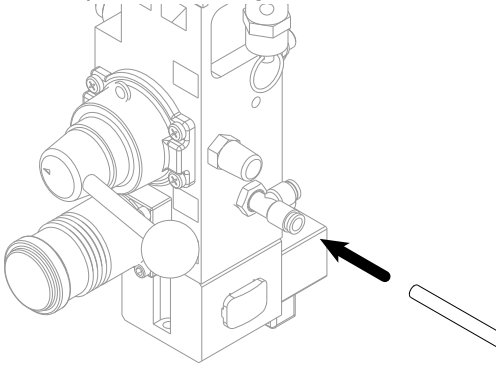

P100 Shown

c. Route the air line beside the other air hoses that were routed in step 12.

17. Ultra-lite Tri-core Only: Replace the Relief Valve on Both Integrated Air Controls.

Replace the standard relief valve found on both the base (A) and catalyst (B) integrated air controls with the relief valve for the Ultra-lite Tri-core dispense valve.

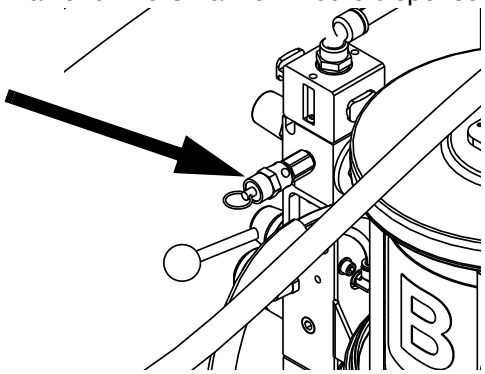

S100 Shown

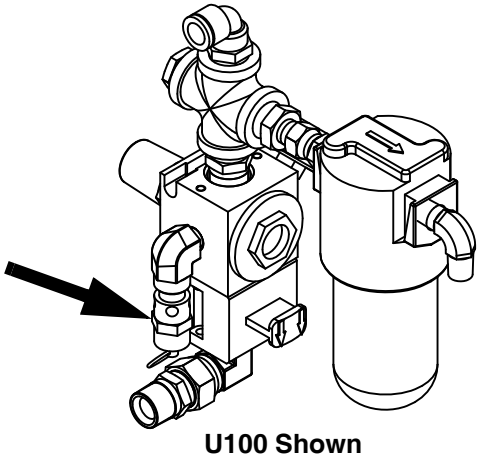

U100 Shown

18. U100 Models Only: Locate and Connect the Pressure Pot

a. Locate the pressure pot on the machine base.

b. Connect the chemical line from the pressure pot to the fluid filter inlet using fitting provided.

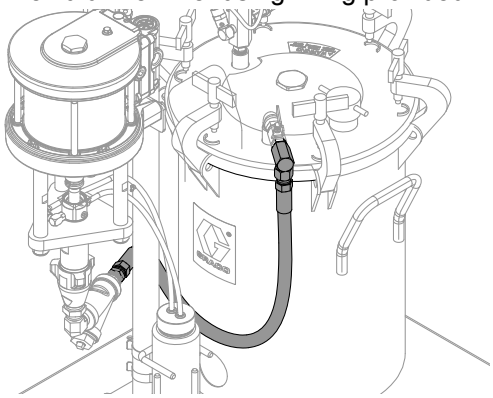

c. Connect the air line from the Base (A) Integrated Air Controls to the pressure pot.

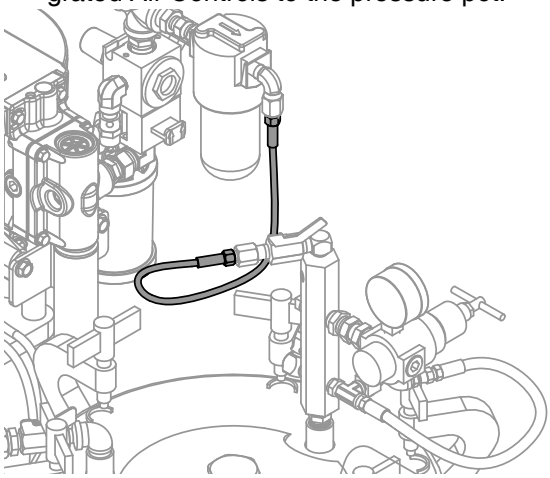

19.Install Accessories.

Refer to the ExactaBlend AGP Advanced Glazing Proportioner - Accessory Kits manual for details.

20.Connect Air to the Machine.

NOTE: Air inlet port size is 3/4 npt (f).

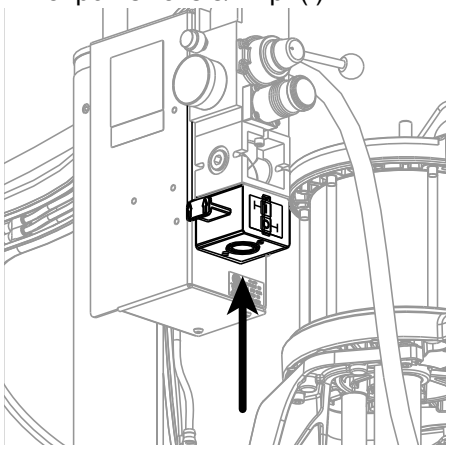

21.Connect Electrical Power to Machine.

Connect the power cord to the electrical enclosure.

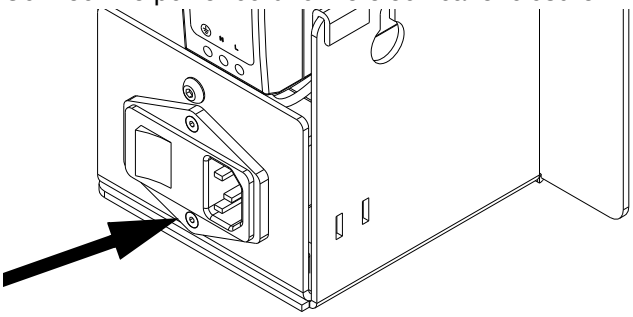

Grounding

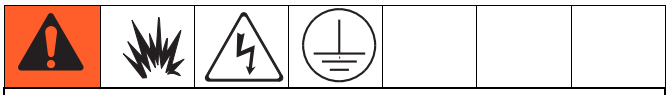

The equipment must be grounded to reduce the risk of static sparking and electric shock. Electric or static sparking can cause fumes to ignite or explode. Improper grounding can cause electric shock. Grounding provides an escape wire for the electric current.

Machine: Grounded through customer supplied power cord.

Fluid supply container: follow local code.

Solvent pails used when flushing: follow local code. Use only conductive metal pails, placed on a grounded surface. Do not place the pail on a nonconductive surface, such as paper or cardboard, which interrupts grounding continuity.

To maintain grounding continuity when flushing or relieving pressure: hold metal part of the gun/dispense valve firmly to the side of a grounded metal pail, then trigger the gun/valve.

Setup

NOTICE

To prevent damage to soft key buttons, do not press the buttons with sharp objects such as pens, plastic cards, or fingernails.

When software is updated on the DM, the software is then automatically updated on all connected GCA components. A status screen is shown while the software is updating to indicate the progress. When the status bar is complete, press to continue.

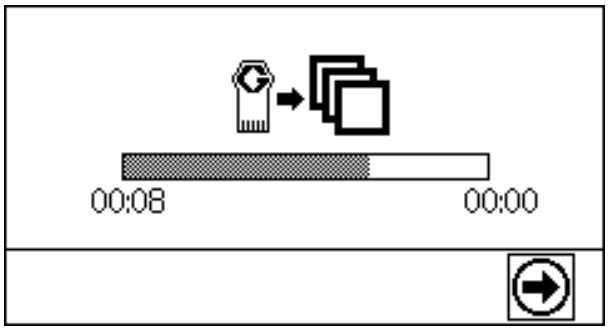

When the main electrical power is turned on, the splash screen will be displayed until communication and initialization is complete.

The DM will display an error message when initialization is complete. This error occurs because the machine has not been calibrated. Press to acknowledge the error and continue with the setup procedure.

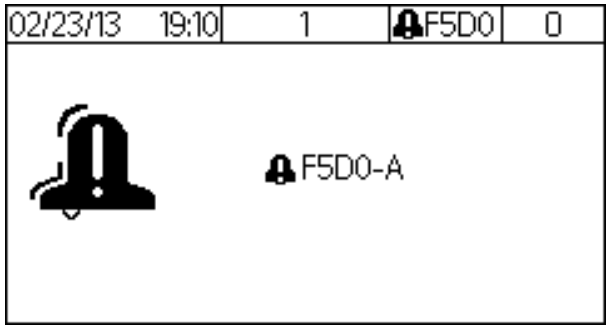

1. Purge Material Lines.

To avoid personal injury or machine damage, adjust all air regulators counter-clockwise prior to turning the main air on.

a. Load material.
Ram: Perform the “Change Drums” procedure in the Air-Powered Ram manual.
Pressure Pot: Perform “Filling the Tank” procedure in the 5-, 10-, and 15-Gallon Pressure Tanks manual. An agitator is recommended for urethane applications utilizing a pressure pot. Set the agitator to 25-50 rpm.

b. **Calibration Check Assembly Only:** Close the calibration check assembly.

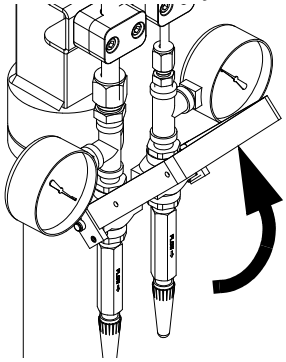

c. Close the base (A) air motor slider valve.

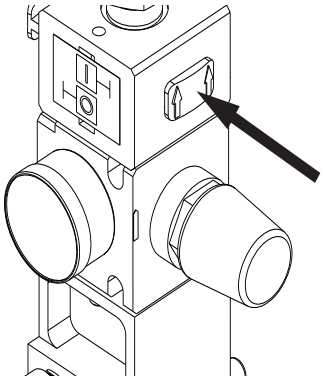

d. Open the base (A) main air slider valve.

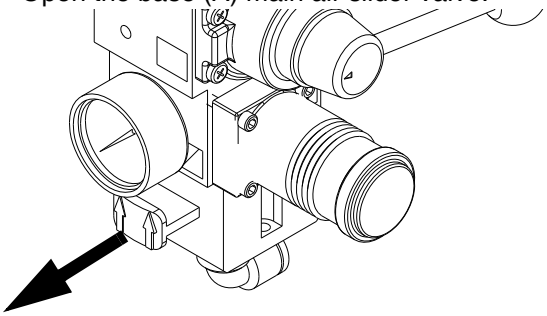

e. Set the base (A) air motor regulators to 10 psi (70 kPa, 0.7 bar).

To avoid personal injury or machine damage, do not exceed 25 psi on the base (A) material until a steady flow of material has been established.

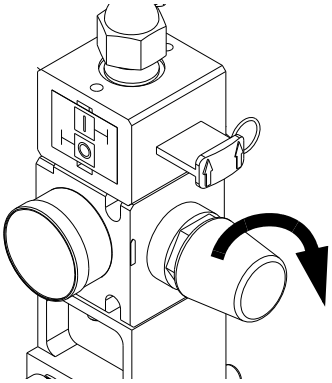

f. Set the fluid regulator adjustment to 40 psi (280 kPa, 2.8 bar).

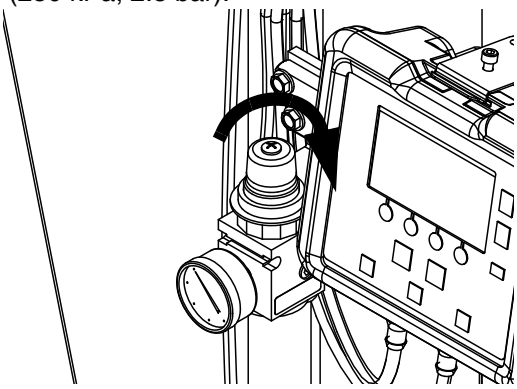

g. Place the base (A) hose end into a waste container.

h. Activate A on the DM.

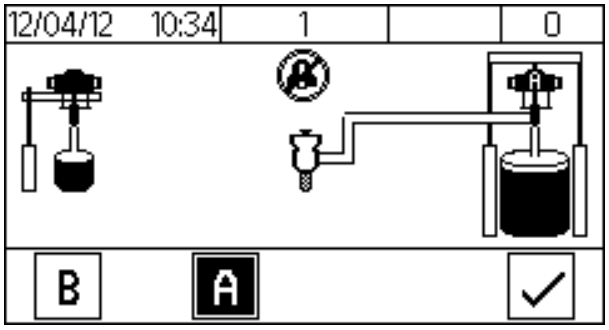

i. Open the base (A) air motor slider valve.

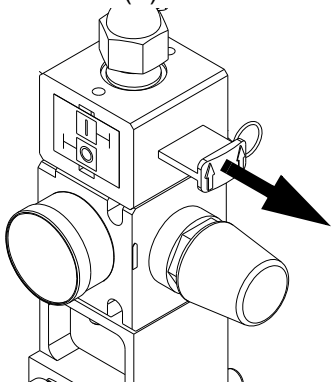

j. Increase the base (A) air motor regulator as required to have material flow out of the hose.

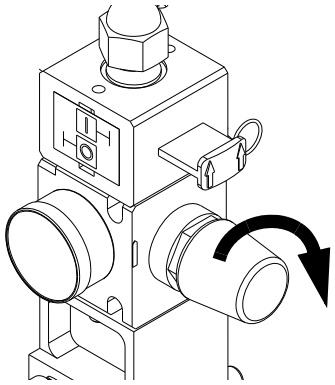

k. Dispense the material into the waste container until the base (A) material hose is purged and free of air.

l. Deactivate A on the DM.

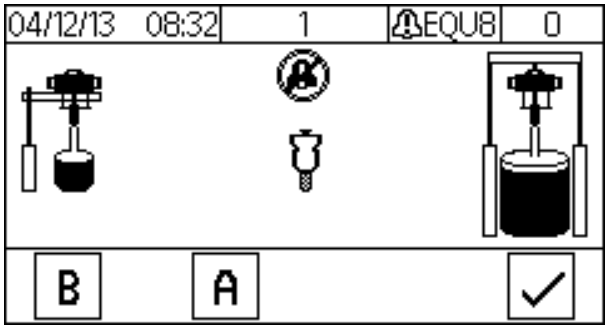

m. Close the base (A) air motor slider valve.

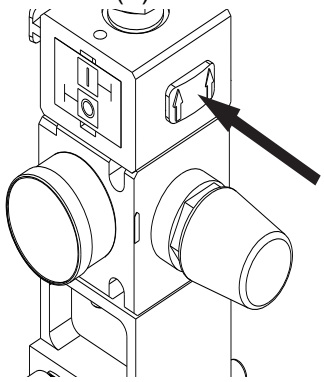

n. Repeat steps a through m for the catalyst (B) hose. Refer to **Integrated Air Controls**, page 19, for visual clarity.

NOTE: Activate B on the DM when prompted and all slider valves refer to the catalyst (B) air controls.

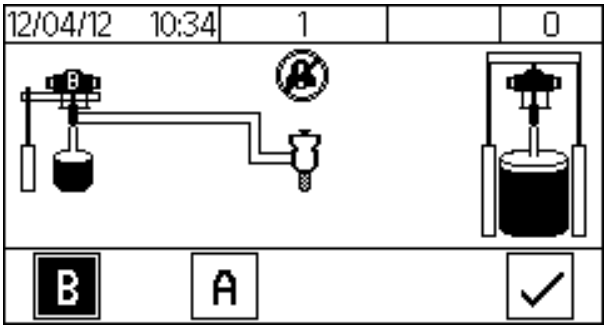

2. Connect the dispense applicator.

MD2:

a. Connect both base (A) and catalyst (B) material hoses to the dispense applicator.

b. Activate both A and B on the DM.

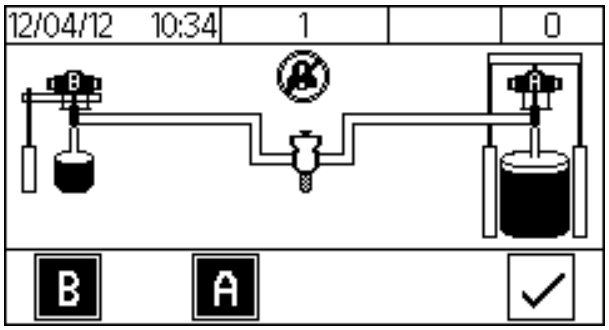

c. Open the catalyst (B) ball valve and dispense material into a waste container until the dispense valve has been purged and is free of air.

d. Activate ✓ on the DM.

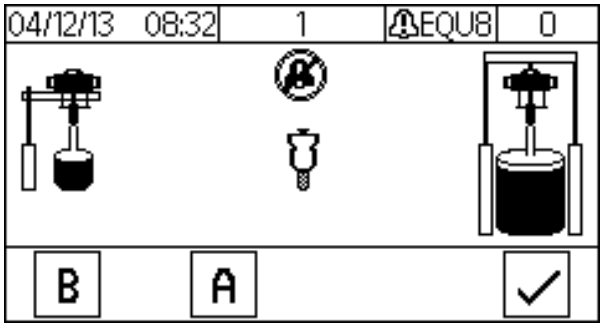

Ultra-lite:

a. Connect the base (A) hose to the base (A) inlet fitting.

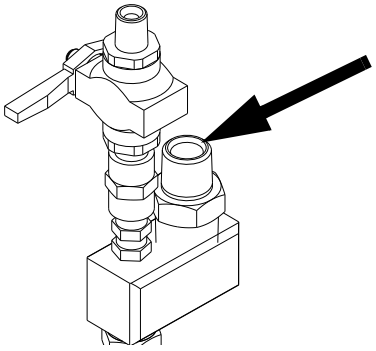

b. Connect the catalyst (B) hose to the catalyst (B) inlet fitting.

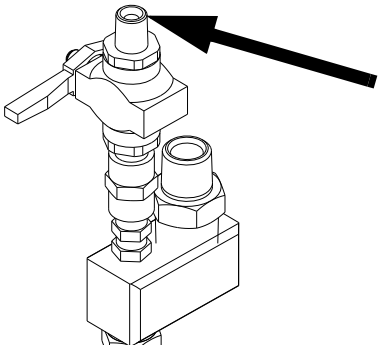

c. Open the catalyst (B) ball valve and dispense material into a waste container until the dispense valve has been purged and is free of air.

d. Close the catalyst (B) ball valve and dispense material into a waste container until only base (A) is present.

3. Calibration Check Assembly Only: Purge material lines to the calibration check assembly.

a. Open the base (A) and catalyst (B) air motor slider valves.

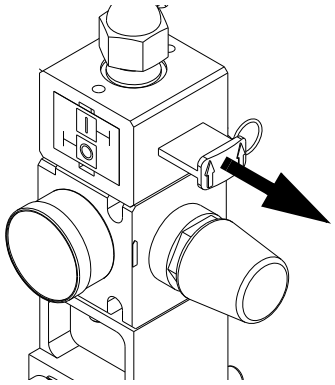

b. Activate both A and B on the DM.

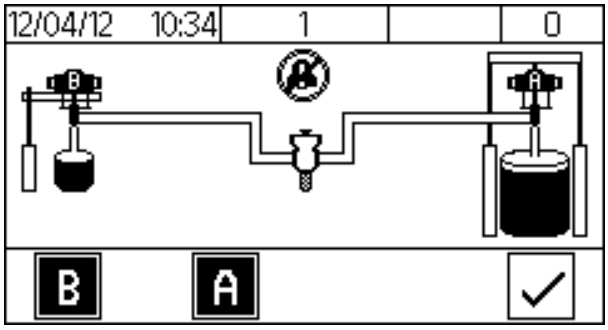

c. Place a waste container underneath the calibration check assembly.

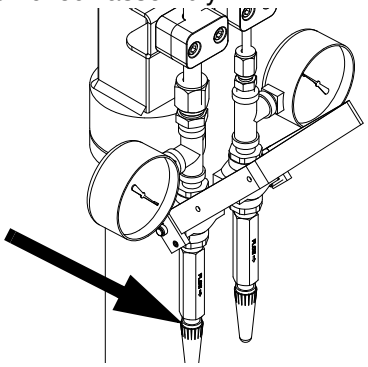

d. Remove the JIC caps from the calibration check assembly.

e. Open the calibration check assembly.

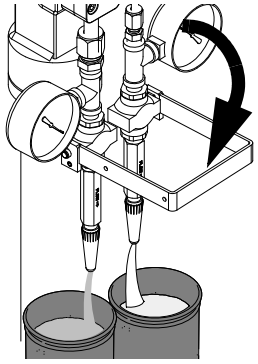

f. Dispense the material into the waste container until both the base (A) and catalyst (B) material lines have been purged and are free of air.

g. Close the calibration check assembly.

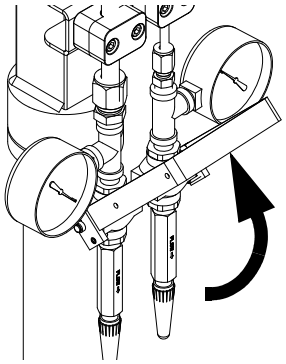

h. Clean the nozzles of the calibration check assembly and install the JIC caps.

i. Activate ✓ on the DM.

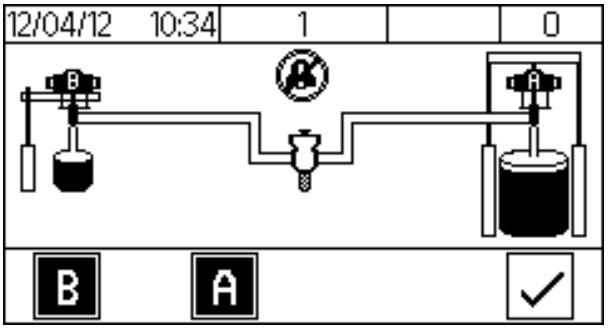

4. Calibrate the machine.

Perform the following procedure during initial setup of the machine, if the flow meters were replaced, or if the machine needs to be recalibrated.

a. Engage the trigger lock.

b. Open the base (A) and catalyst (B) air motor slider valves.

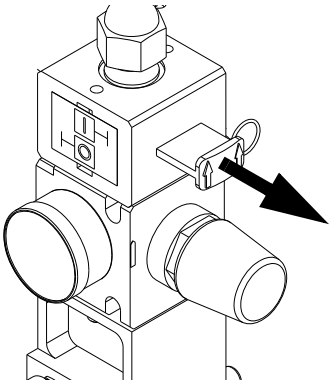

c. Set the base (A) and catalyst (B) air motor regulators.

MD2 or Ultra-lite with flexible hose:
70 psi (480 kPa, 4.8 bar).
Ultra-lite with Tri-core:
85 psi (586 kPa, 5.9 bar)

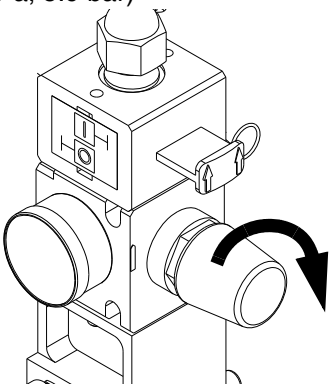

d. Set the fluid regulator adjustment to 40 psi (280 kPa, 2.8 bar).

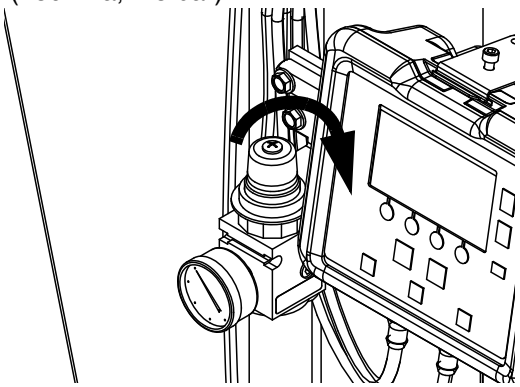

e. Place two separate containers on two separate scales and zero the scales. These containers will be used in step j.

NOTE: Weight units of the scales are to be set as grams.

f. Navigate to setup **Screen 2**.

NOTE: Screen 2 is already shown if this procedure is performed during the initial setup of the machine.

Screen 2 - Recalibration

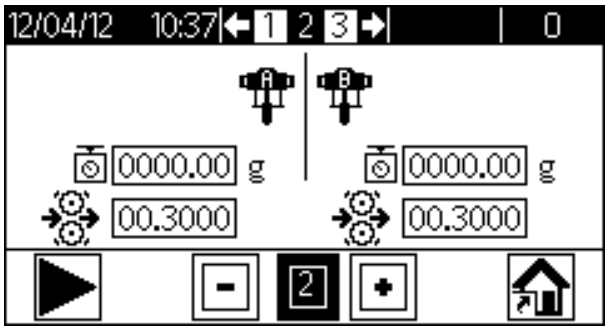

Screen 2 - Initial Calibration

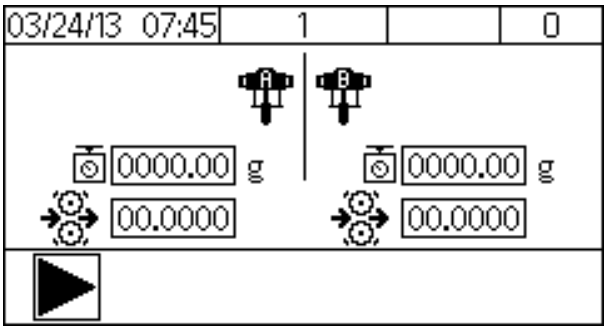

g. Activate ▶ to signal the machine of the following calibration shot.

h. **MD2:** Install the calibration nozzle onto the dispense applicator.

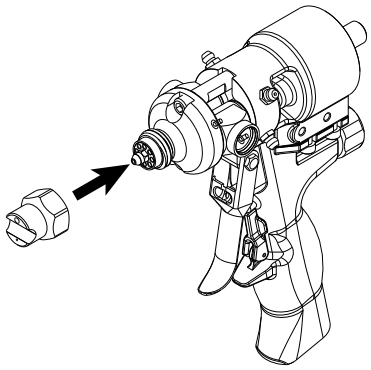

i. Disengage the trigger lock.

j. Dispense the chemicals into two separate containers.
MD2: Chemical will be dispensed through the applicator.
Ultra-lite: Chemical will be dispensed through the calibration check assembly.

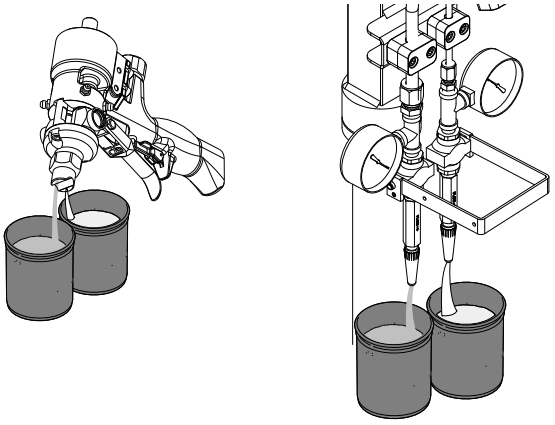

k. Continue to dispense the chemical into the containers until both status bars are complete.

NOTE: If the light tower is installed, a green light will be illuminated when the status bars are complete.

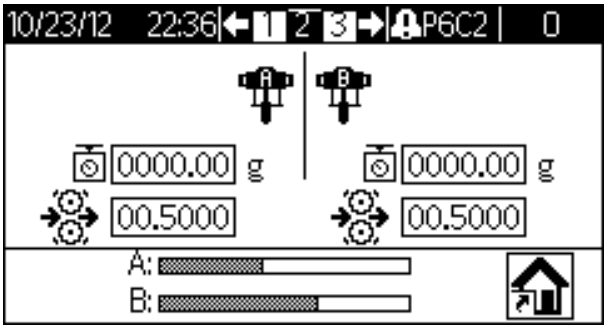

l. Weigh both containers separately and input the values of both chemicals into setup **Screen 2**.

NOTE: To change a value in a desired field, perform the following.

- Press ↑ ↓ ← or → to highlight the desired field to be changed.
- Press ↵ to activate the desired field or to activate/deactivate an option.
- Press ↑ or ↓ to change the value of the selected field.
- Press ↵ to set the value.

NOTE: Weight units are in grams.

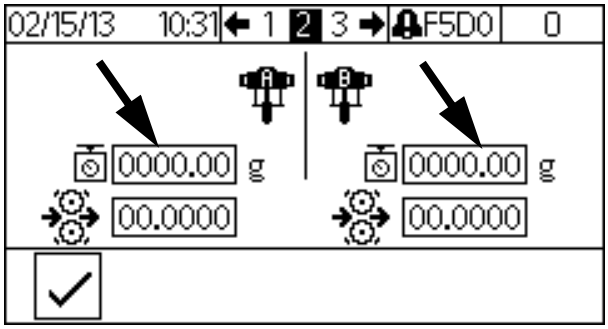

m. Press ✓ to signal the machine that the calibration procedure is complete. The machine will automatically calculate the K factor of both materials.

n. Engage the trigger lock.

o. **MD2:** Remove the calibration nozzle and install a static mixer on the dispense valve.

p. Navigate to the **Home** screen.

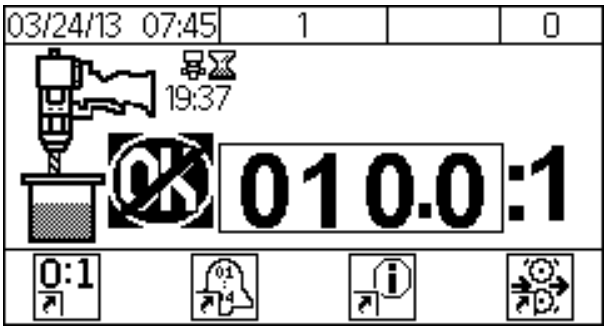

5. Set the Display Module (DM).

Perform the following tasks to fully setup the DM. Refer to **Appendix A - DM Icons Overview**, page 64, for clarity.

a. Define general system settings. See **Screen 3**, page 66.

b. Define specific system settings. See **Screen 1**, page 66.

c. **P100 with Ultra-Lite Tri-core Mixer:** Select the 85 psi (5.9 bar) option box. See **Screen 1**, page 66.

Startup

Do not operate machine without all covers and shrouds in place.

1. Engage the trigger lock.
2. Install the static mixer or nozzle onto the dispense applicator. See specific applicator manual for details.

NOTE: Cutting more than two outlet steps on the static mixer may increase the chance of the mixing elements being pushed out of the static mixer.

NOTE: If using the mixer element kit 24T035, assemble the sleeve onto the MD2 dispense applicator prior to fastening the 1/4 NPT outlet adapter. Hand tighten the 1/4 NPT outlet adapter.

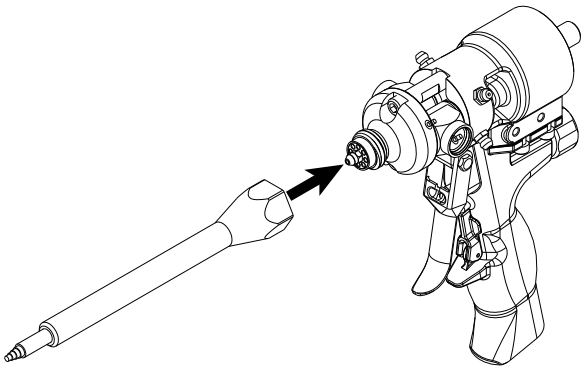

3. Turn the power on at the electrical enclosure.

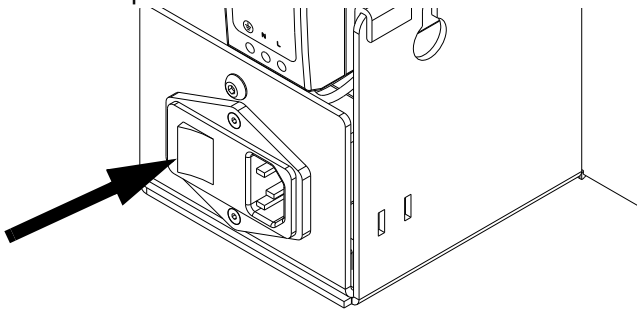

4. Open the base (A) and catalyst (B) main air slider valves.

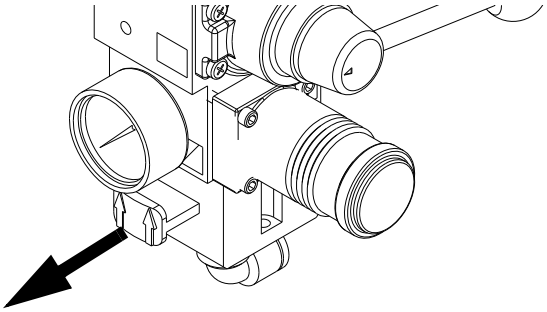

5. Open the base (A) and catalyst (B) air motor slider valves.

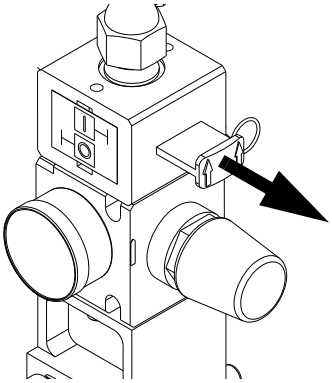

6. Verify the base (A) and catalyst (B) air motor regulators are set to the correct pressure.

MD2 or Ultra-lite with flexible hose:
70 psi (480 kPa, 4.8 bar).
Ultra-lite with Tri-core:
85 psi (586 kPa, 5.9 bar)

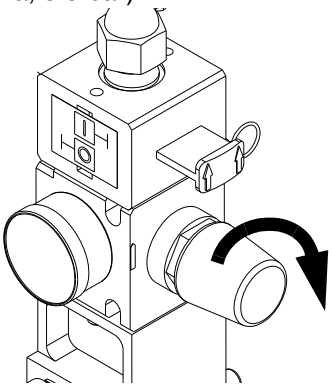

7. **P100 with Ultra-Lite Tri-core Mixer:** Verify that the 85 psi (5.9 bar) option box is selected. Refer to **Screen 1**, page 66.

8. Verify the ram director valve is set to lower the ram.

9. The DM will show a standby screen when power is first supplied to the machine. Press to go to the **Home** screen.

NOTE: The **Home** screen will indicate “Not OK” and the light tower, if installed, will illuminate red until the next step is completed.

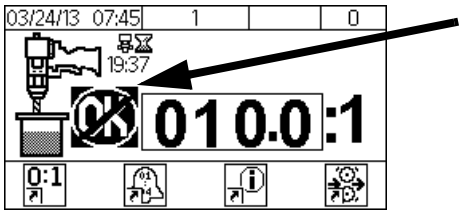

10. Disengage the trigger lock.

NOTE: If a new static mixer has been installed, a base purge is recommended to prevent side walling. Perform **Base Purge**, page 46.

11. Hold a metal part of the gun firmly to a grounded metal pail. Trigger the gun until the Display Module shows “OK” and the light tower, if installed, illuminates green.

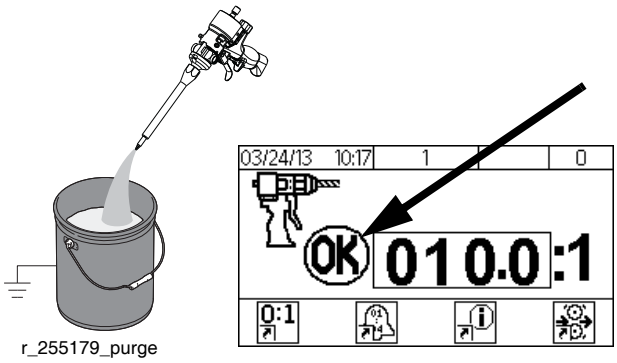

r_255179_purge

NOTE: Additional dispensing may be required in order to ensure a good mixture.

Base Purge

Base purge results in the purging of the base (A) chemical through the dispense valve. Base purging prevents mixed material within the dispense applicator from curing. The machine will remain pressurized and electrically connected.

1. Navigate to the **Purge/Prime** screen.

NOTE: Verify both pumps are activate.

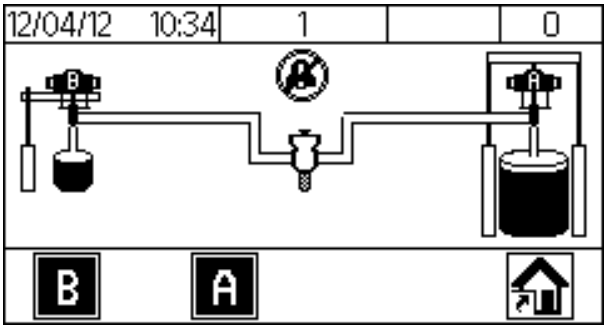

2. Close the catalyst (B) ball valve located near the dispense applicator.

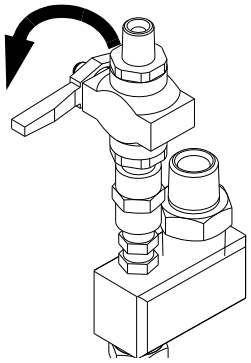

3. Dispense material into a waste container until only the base (A) chemical is present.

4. Engage the trigger lock.

Pressure Relief Procedure

This equipment stays pressurized until pressure is manually relieved. To help prevent serious injury from pressurized fluid, such as skin injection, splashing fluid and moving parts, follow the Pressure Relief Procedure when you stop dispensing and before cleaning, checking, or servicing the equipment.

1. **If electrical power is supplied to the machine**, perform **Base Purge**, page 46.

   If electrical power is not supplied to the machine, continue to the next step.

2. **S100 and P100:** Close the base (A) and catalyst (B) air motor slider valves.
   U100: Close the base (A) air motor slider valve and the supply ball valve on the pressure pot. Bleed the air from the pressure pot by opening the manual bleed valve.

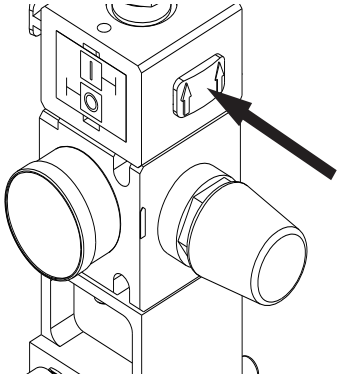

MD2:

a. Remove the static mixer.

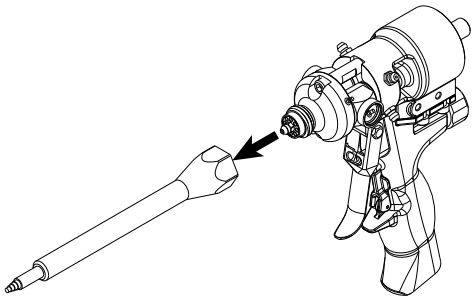

b. Open the catalyst (B) ball valve located near the dispense applicator.

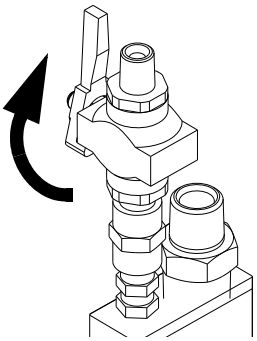

c. Disengage the trigger lock.

d. Trigger the gun to relieve pressure into a waste container.

e. Verify the pressure gauges display “0”.

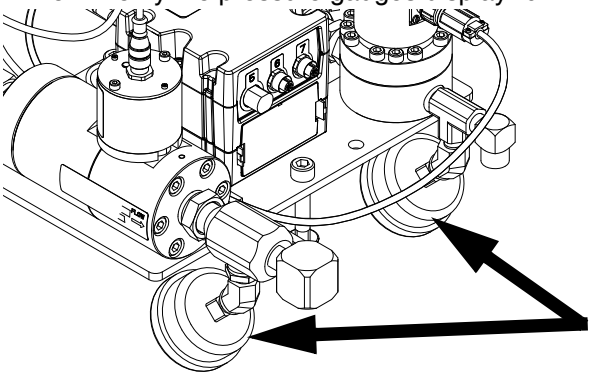

f. Close the base (B) and catalyst (A) main air slider valves.

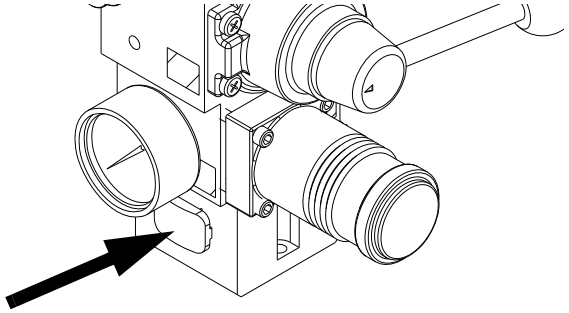

g. **If electrical power is not supplied to the machine,** place a waste container underneath the pump bleed valves. Open the pump bleed valves.

NOTE: For U100 systems, the catalyst bleed valve is located on the pump outlet filter.

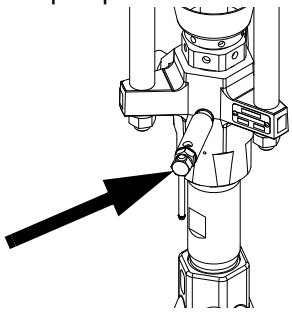

h. Clean the nose of the dispense valve or bleed valve.

i. Install the night cap onto the MD2.

Ultra-lite:

a. Remove the JIC caps from the calibration check assembly.

b. Place a waste container underneath the calibration check assembly.

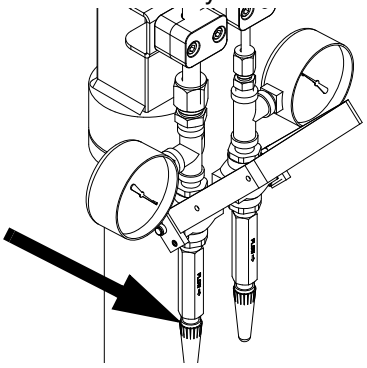

c. Open the calibration check assembly to relieve pressure into a waste container.

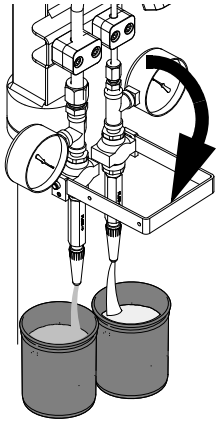

d. Verify the pressure gauges display “0”.

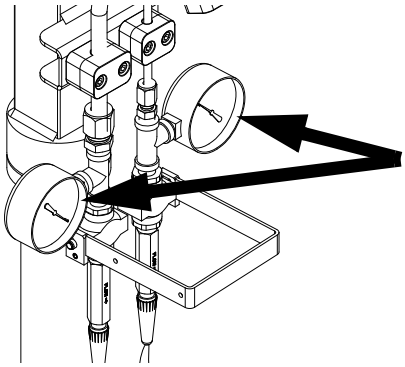

e. Close the calibration check assembly.

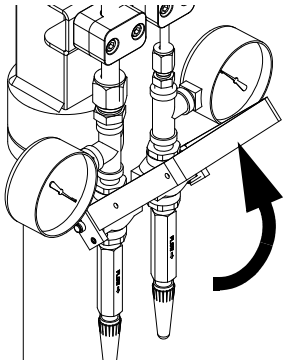

f. Clean the nozzles of the calibration check assembly and install the JIC caps.

g. Close the base (A) and catalyst (B) main air slider valves.

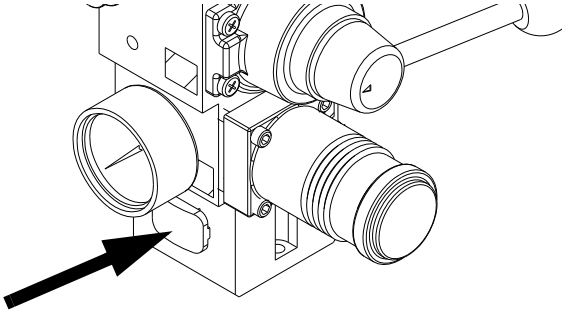

h. **If electrical power is not supplied to the machine,** place a waste container underneath the pump bleed valves. Open the pump bleed valves. Clean the pump bleed valves once complete.

NOTE: For U100 systems, the catalyst bleed valve is located on the pump outlet filter.

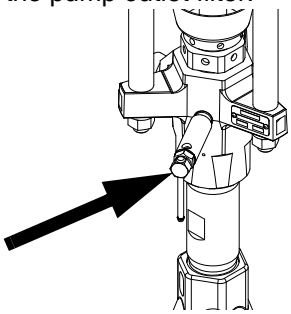

Shutdown

1. Perform **Pressure Relief Procedure**, page 47.
2. Turn the power off at the electrical enclosure.

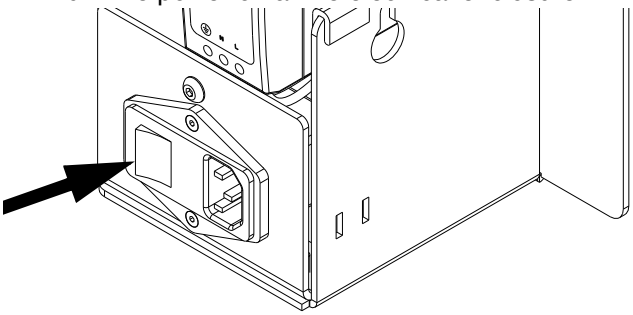

Calibration Check

Perform the calibration check procedure to verify the calibration of the flow meters are correct.

1. Perform **Base Purge**, page 46.
2. Navigate to the **Home** screen.

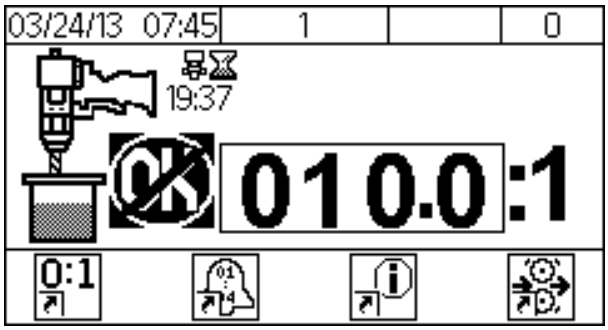

3. Activate on the DM.

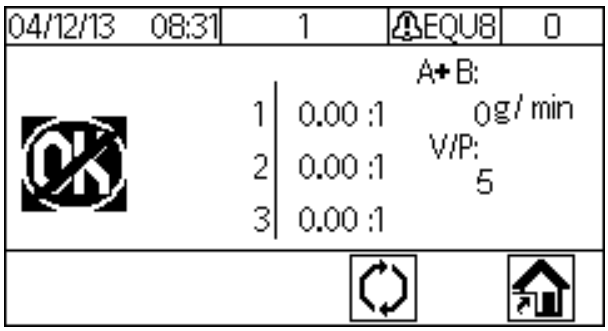

4. Remove the static mixer.

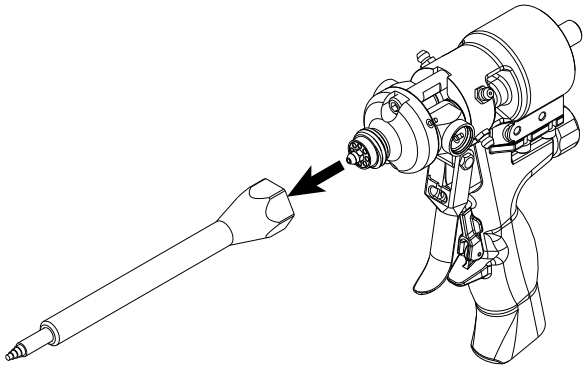

5. **MD2 Only:** Install the calibration nozzle onto the dispense applicator.

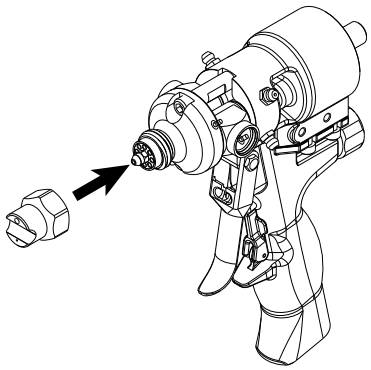

6. Open the catalyst (B) ball valve located near the dispense applicator.

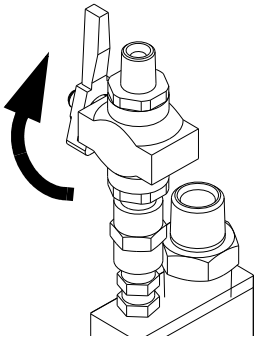

7. **Calibration Check Assembly Only:** Dispense material into a waste container at the calibration check assembly to verify the V/P shown on the DM is at the correct value.

NOTE: A restrictor pin for the catalyst (B) restrictor housing may be required to obtain 5 psi (35 kPa, 0.3 bar) or above for the V/P shown on the DM.

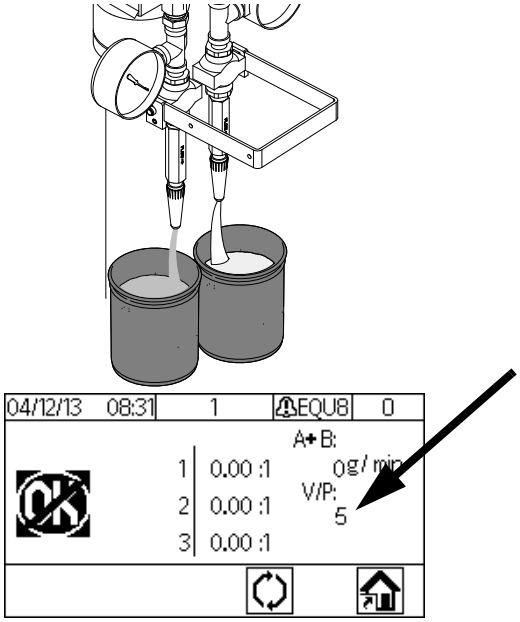

8. Disengage the trigger lock.

9. Hold a metal part of the gun firmly to a grounded metal pail. Trigger the gun until the Display Module shows “OK”.

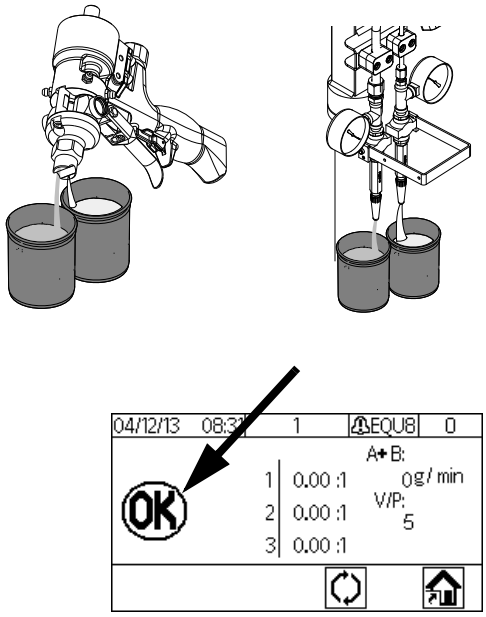

10. Place two separate containers on two separate scales and zero the scales. These containers will be used in step 11.

NOTE: Weight units of the scales are to be set as grams.

11. Dispense the chemicals into two separate containers.

    MD2: Chemical will be dispensed through the applicator.
    Ultra-lite: Chemical will be dispensed through the calibration check assembly.

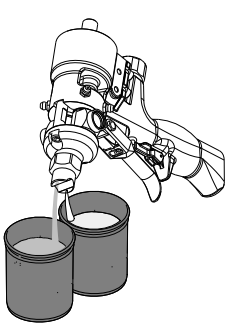

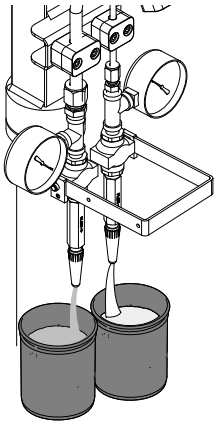

12. Continue to dispense the chemical into the containers until a 400 gram shot has been dispensed.

NOTE: A value will be shown on the DM when a dispense is complete. This is the value the machine was running at based on the flow meter values.

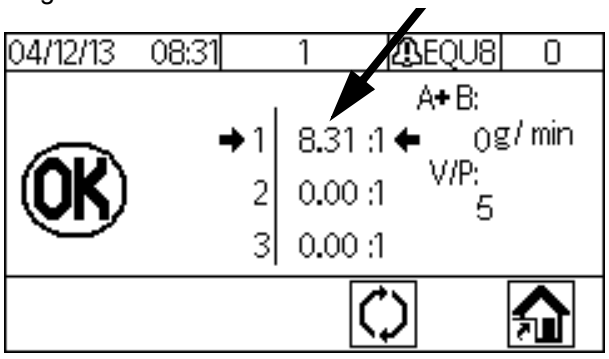

13. Weigh both containers separately and calculate the ratio (A/B) of the two chemicals.

14. Compare the ratio calculated from the weighed containers with the ratio shown on the DM.

15. **If the ratio comparison is acceptable,** press on the DM or repeat steps 10 through 14 twice if more verification is required. Press to clear all values if more than three samples are required.

16. **If the ratio comparison is unacceptable**, perform **Calibrate the machine.** page 40.

Maintenance

Task	Schedule
Refer to specific component manual for more detailed information.	As Required
Check catalyst (B) filter assembly to prevent crystallization.	Weekly
Verify calibration check assembly outlets are clear and unobstructed.	Weekly
Check desiccant.	Weekly
Check restrictor housing and pin assembly to prevent crystallization.	Weekly
U100: Check iso lube bottle for discoloration.	Daily
Perform **Shutdown** and install nightcap.	Daily
Adjust packing nuts.	When TSL has seeped through the packing nut

Adjust Packing Nuts

NOTE: There must be no pressure when adjusting the packing nuts. Air pressure in the feed tanks is too much.

1. Follow **Pressure Relief Procedure**, page 47, including relieving air pressure in the tanks.
2. Fill metering pump packing nuts with throat seal liquid (TSL).
3. After TSL is added, torque metering pump packing nuts to 50 ft-lb (67.5 N•m). Follow instructions in Xtreme Lowers manual 311762.
4. Fill dosing valve packing nut with throat seal liquid (TSL).
5. After TSL is added, tighten dosing valve packing nuts 1/4 turn after nut contacts packings; about 145-155 in-lb (16-18 N•m).

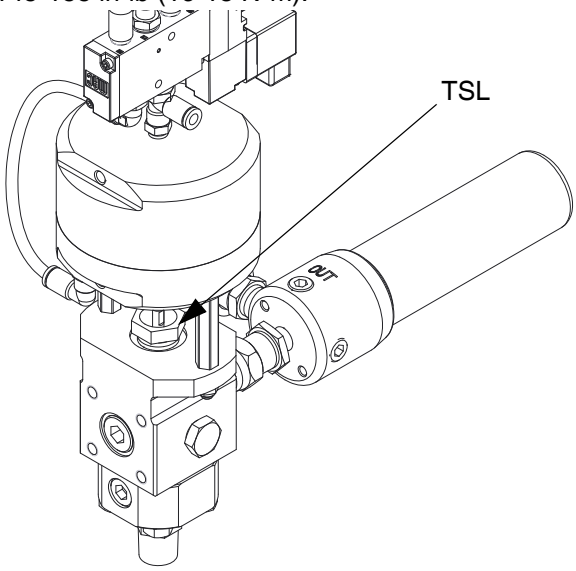

Filters

Once a week check, clean, and replace (if needed) the following filters.

- **S100 and U100 Models:**
  Catalyst pump outlet filter comes with a 60 mesh filter. Two pack 60 mesh filter replacement kit, 224459, is available.
- **P100 Models:**
  Catalyst pump outlet filter comes with a 30 mesh filter. Two pack 30 mesh filter replacement kit, 224458, is available.

Seals

Once a week, check and tighten throat seals on the pumps and dosing valve.

DM - Battery Replacement and Screen Cleaning

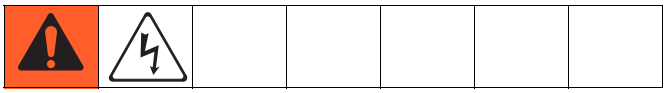

Battery Replacement

A lithium battery maintains the DM clock when power is not connected.

To replace the battery:

1. Disconnect power to the DM.

NOTE: This can be done by removing the CAN cable from the bottom of the DM.

2. Remove rear access panel.

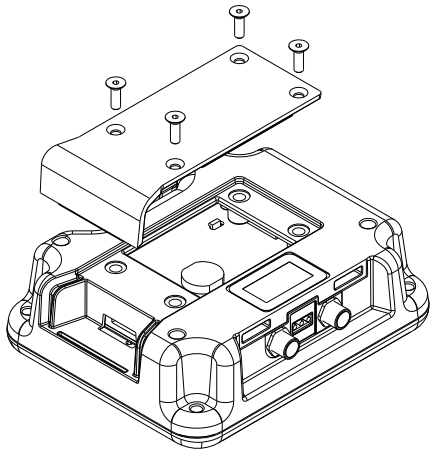

3. Remove the old battery and replace with a new CR2032 battery.
4. Properly dispose the old lithium battery according to local codes.
5. Replace rear access panel.
6. Connect the power to the DM and reset the clock through **Screen 3**. Refer to **Appendix B - DM Setup Screens Overview** for more detail.

Cleaning

Use any alcohol-based household cleaner, such as glass cleaner, to clean the DM. Spray on the rag then wipe DM. Do not directly spray the DM. Replaceable screen protectors, 15M483, are available.

Software Update Procedure

When software is updated on the DM, the software is then automatically updated on all connected GCA components. A status screen is shown while the software is updating to indicate the progress.

Refer to PKE 2823 found at http://graco.custhelp.com/app/answers/detail/a_id/2823/ or by utilizing the QR code below for software version history.

1. Turn the power switch to OFF.
2. Remove the DM from the bracket.
3. Remove the token access panel.

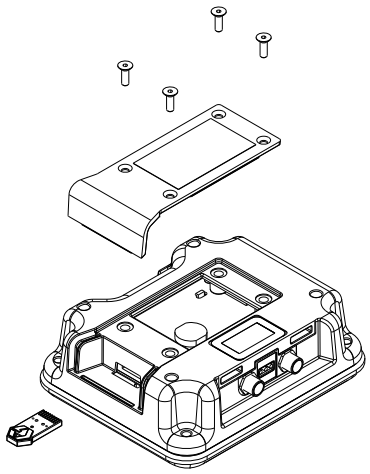

FIG. 15: Remove Access Cover

4. Insert and press software upgrade token (Token part no.16V853) firmly into the slot.
5. Install the DM onto the bracket.
6. Turn the power switch to ON.

NOTICE

A status is shown while software is updating to indicate progress. To prevent corrupting the software load, do not remove token until the status screen disappears.

NOTE: When the screen turns on, the following screen will appear.

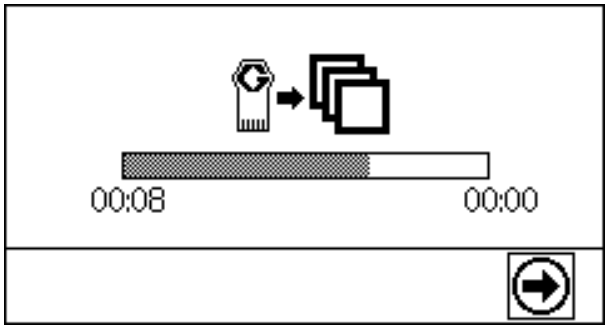

Icon	Description
	Update successful.
	Update unsuccessful.
	Update complete, no changes necessary
	Update was successful/complete but one or more GCA modules did not have a CAN boot-loader, so the software was not updated in that module.

7. Remove the token.
8. Replace the token access panel.
9. Press to continue.

Troubleshooting

1. Follow **Pressure Relief Procedure**, page 47, before checking or repairing a dispense valve.
2. Check all possible problems and causes before disassembling the dispense valve.

Mechanical and Electrical

PROBLEM	CAUSE	SOLUTION
Dispense Applicator		
No flow of catalyst (B).	Clogged gun nose.	Clean or replace the gun nose.
	Clogged injector housing (Ultra-lite only).	Clean or replace the injector housing.
	Clogged restrictor housing	Clean or replace the restrictor housing and pin.
	Ball valve is closed.	Open the ball valve.
	V/P is off.	Ensure the power is on.
		Ensure the machine is in dispense mode.
		Ensure V/P is turned on when machine enters Purge/Prime mode.
	No air to catalyst (B) pump.	Turn air on.
	No catalyst ram down pressure.	Ensure that there is pressure to the catalyst ram and that the control lever is in the down position.
Dosing valve leaking at rod.	Loose or worn packings.	Tighten packing nut. If leak continues, replace the packings.
Dosing valve between main housing and outlet housing.	Bad o-ring.	Replace both o-rings on the seat.
Dosing valve not cycling	Bad cable.	Replace the cable.
	Bad power valve.	Replace the power valve.
Dispense valve will not dispense material.	Trigger lock engaged.	Disengage the trigger lock.
	No air to MD2.	Connect air to the MD2.
		Turn on the air.
	Clogged mixer.	Clean or replace Tri-core or Flex mixer.
	Ultra-lite has cured material in it.	Clean or replace.
Dispense valve will not stop material dispense.	No air to MD2.	Connect air to the MD2.
		Turn on the air.
	Bad seal in MD2.	Repair the MD2. Refer to the MD2 for more details
	Ultra-lite seal is worn	Replace the seal.

PROBLEM	CAUSE	SOLUTION
No material flow.	Material supply is off.	Ensure the base (A) solenoid valve is on and has pressure.
		Ensure the catalyst (B) V/P is on and has pressure.
		Ensure the motor(s) have air pressure.
		Ensure there is sufficient down pressure and the control lever is in the down position.
	Clogged mixer.	Replace the static mixer.
		Clean or replace the Tri-core or hose mixer.
	Clogged restrictor	Clean or replace the restrictor.
Fluid Plate		
V/P won't turn on. **NOTE:** The V/P turns off after 30 seconds of no activity. It will turn on during dispense or when entering Purge/Prime mode.	Bad cable.	Replace the cable.
	Disconnected cable.	Connect the cable.
V/P reads “0”.	Air supply to V/P shut off.	Turn on the air supply to the V/P.
V/P does not match information on the information screen.	Air supply is restricted.	Replace with a minimum 3/4 in. ID hose.
	Faulty V/P.	Replace V/P
V/P obtains 85 psi (586 kPa, 5.86 bar) and then alarms.	Flow rate is too high.	Reduce the flow rate.
	Too much restriction in the catalyst (B) hose.	Resize the hoses to reduce restriction.
	Flowmeter clogged.	Clean or replace the flow meter.
	Bad flowmeter.	Replace the flowmeter.
	Catalyst (B) air motor pressure is too low.	Catalyst (B) air motor pressure is too low.
	Clogged restrictor housing.	Clean or replace restrictor housing and pin.
Abnormal pressures during operation or after dispense	Pressures not balanced.	Change catalyst hose size.
	Ball/seat not seating properly in fluid regulator(s).	Clean or replace ball/seat.
	Restrictor pin not seating in housing.	Use a fitting behind the restrictor housing with an inner diameter that will not allow the pin to back out.
Light Tower		
Light does not blink green, red, and off in sequence when the machine is first turned on.	Bad connection or cable	Ensure cable is connected or replace the cable.
	Bad light stack.	Replace light stack.

PROBLEM	CAUSE	SOLUTION
Pump		
Abnormal pump pressures during operation.	Worn or damaged packings.	Replace the packings.
	Bad check valves.	Clean or replace the check valves.
Pump moves during stall.	Malfunctioning check valves.	Clean or replace the check valves.
Pump does not run.	No air supply to the pump.	Turn on the air or increase the air pressure.
	Catalyst (B) ball valve is closed.	Open the ball valve.
	Clogged mixer.	Replace or clean the mixer.
	Ultra-lite has cured material in it.	Clean or replace.
	Clogged restrictor	Clean or replace the restrictor.

Display Module

CODE	PROBLEM	CAUSE	SOLUTION
F6B3-A	Base Flow Meter Error	Flow meter signal is not detected.	Check the base flow meter cable.
			Replace the sensor.*
		Flow meter is clogged.	Clean the flow meter.
		Flow rate is too low.	Increase the system flow rate.
F6A3-A	Catalyst Flow Meter Error	Flow meter signal is not detected.	Check the catalyst flow meter cable.
			Replace the sensor.*
		Flow meter is clogged.	Clean the flow meter.
		Flow rate is too low.	Increase the system flow rate.
F5D0-A	Machine not calibrated	Calibration sequence has not been performed.	Perform the Calibration procedure or enter the known calibration values.
F9D4-A	System Flow Rate too Low	Flow rate is too low for accurate measurement by flow meters.	Increase the system flow rate.
			Increase the restriction in the catalyst flow path.
F9D5-A	System Flow Rate too High	Flow rate is too high for accurate measurement.	Decrease the system flow rate.
			Reduce the restriction in the catalyst flow path.
R4D0-A	High Ratio Alarm	Ratio is too high.	Re-calibrate the machine.
		Catalyst material line is plugged.	Check the material supply.
		The flow for the base is too high and the flow for the catalyst is too low.	The flow could be turned down or a larger size hose could be used for the catalyst.
		Adjusted flowrate between dispenses.	Run until the machine status states “OK.”
R1D0-A	Low Ratio Alarm	Ratio is too low.	Re-calibrate the machine.
		Base flow rate is too low.	Check the material supply.
		Adjusted flowrate between dispenses.	Increase the base flow rate.
			Run until the machine status states “OK.”
R9CX-A	Insufficient Restrictions / Unbalanced Pressure	The restrictor pin is missing or under sized.	Install a restrictor pin of the correct size.
		Hoses are not sized to properly balance the pressures.	Size the hoses so that the pressures are balanced.
L1C1-D	Check Pump Base/Catalyst Drum	Low level drum.	Check the drum base or catalyst material level and replace it if necessary.
			Check the drum level sensor cable.
N/A	Purge Timer Expired	Gel timer has expired.	Use the machine. (Normal operation).
			Dispense material into a waste container.
			Base purge the machine.

CODE	PROBLEM	CAUSE	SOLUTION
CUCX-V	Duplicate Node Found	Unknown Software Error.	Cycle the system power.
		Unintended module plugged into the system.	Verify that only necessary GCA modules are plugged into the system.
CACX-A	FCM Missing	FCM unplugged from CAN bus.	Verify the FCM CAN cable is plugged in.
		Damaged FCM.	Replace the FCM.
		Damaged FCM Base.	Replace the FCM base.
CAUX-A	USB Disconnected	USB unplugged from CAN bus.	Verify the USB CAN cable is plugged in.
		Damaged USB.	Replace the USB.
		Damaged USB Base.	Replace the USB base.

* *Verify the sensor is working by going to the information screen and removing the flow meter sensor from the flow meter body. Wave a small metallic object back and forth over the sensor. A flow rate should be displayed on the screen for the sensor being tested.*

Accessories and Kits

Low Level Sensors, 24R935 (S100 and P100 only)

Alerts the user when material drums are empty.

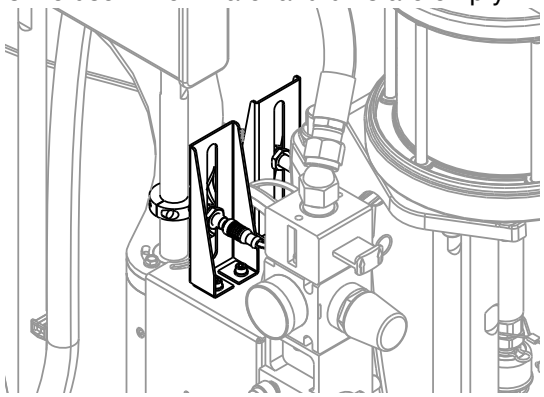

Calibration Check Assembly, 24R777

Allows the user to watch the DM while performing the **Calibration Check** procedure. Kit is required for all Ultra-lite dispense valve applications.

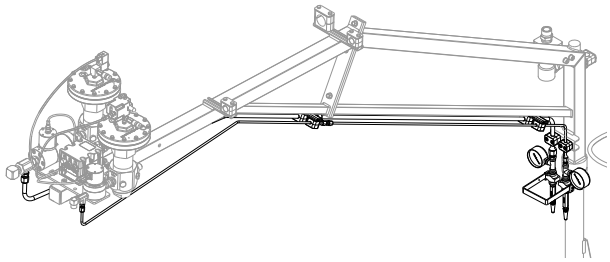

USB Kit, 24R936

Allows the user to monitor and download information of the machine status.

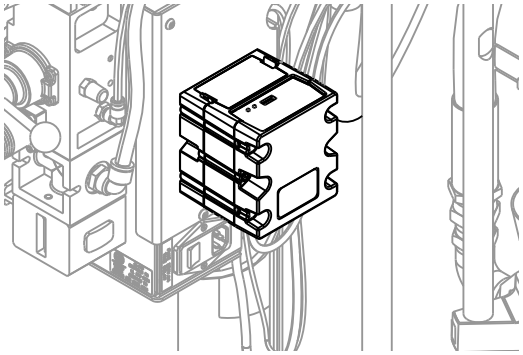

MD2 Nose Pieces

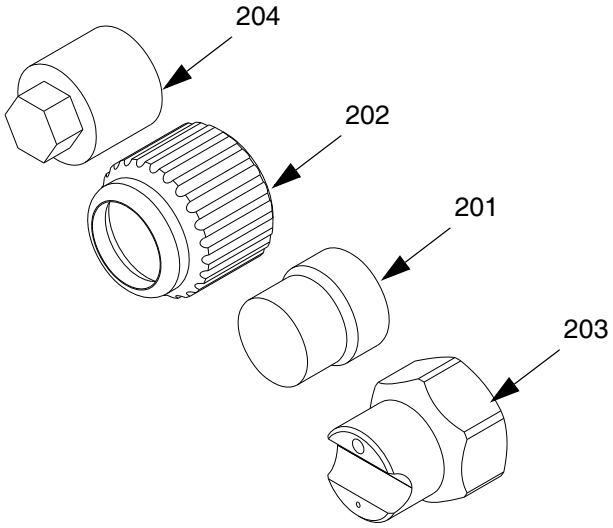

Ref	Part	Description
201	15V628	10:1 Nightcap
202	15K688	Retaining Nut
203	24P850	10:1 Ratio Check
204	256793	Assembly Tool

Catalyst (B) Hoses

Allows the user to balance material pressure in the catalyst (B) line by changing the hose diameter.

Part	Description
16W047	HOSE, assy, 3/32”x60”, 6k, nylon
16V531	HOSE, assy, 1/8”x60”, 6k, nylon
16V219	HOSE, assy, 1/4”x60”, 5k, ss, braid
16V220	HOSE, assy, 3/8”x60”, 5k, ss, braid
16V221	HOSE, assy, 1/2”x60”, 5k, ss, braid

Restrictor Kit, 24R804

Allows the user to balance material pressure in the catalyst (B) line by changing the pin size.

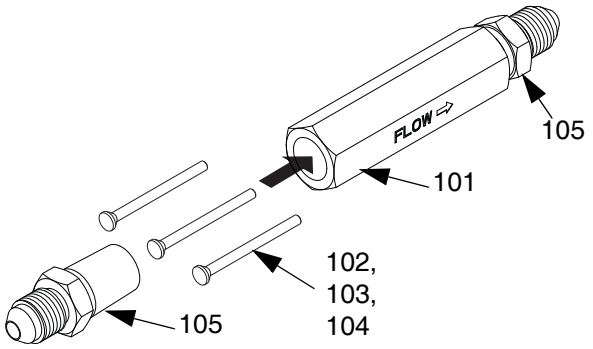

Ref	Part	Description
101	16V360	HOUSING, restrictor, 1/4npt
102	16V356	PIN, restrictor, #1, 0.094 in.
103	16V359	PIN, restrictor, #2, 0.098 in.
104	16V357	PIN, restrictor, #3, 0.102 in.
105	124961	FITTING, 04jic x 1/4npt

Restrictor Kit 24W146

Allows the user to balance material pressure in the catalyst (B) line by changing the pin size without removal of the catalyst line.

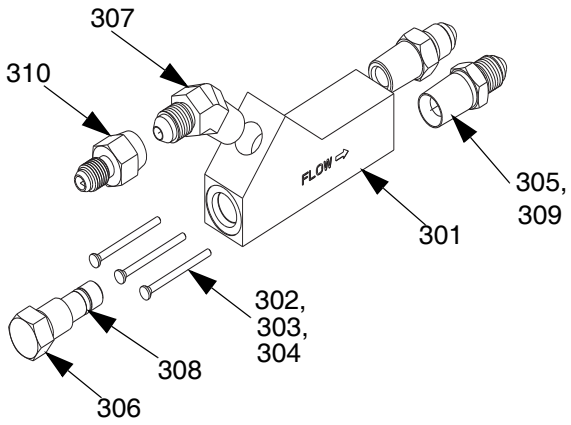

Ref	Part	Description
301	17B762	HOUSING, Restrictor, 3 Port
302	16V356	PIN, Restrictor, 0.094”
303	16V359	PIN, Restrictor, 0.98”
304	16V357	PIN, Restrictor, 0.102”
305	124961	FITTING, 04jic x 1/4 npt
306	17B763	PLUG, Restrictor, Pin
307	17B765	FITTING, Elbow, 0451C
308	111516	PACKING, O-Ring
309	124846	FITTING, 03jic x 1/4npt
310	061701	FITTING, 03jic x 04jic

Caster Kit, 24T091

Includes four casters.

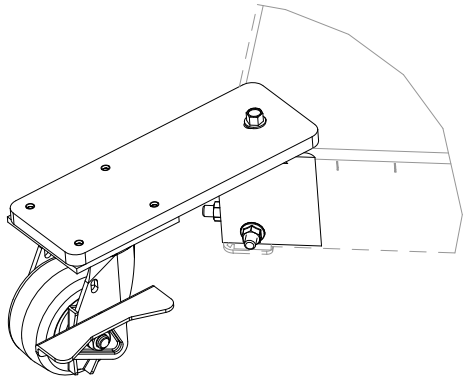

Mixer Elements for MD2

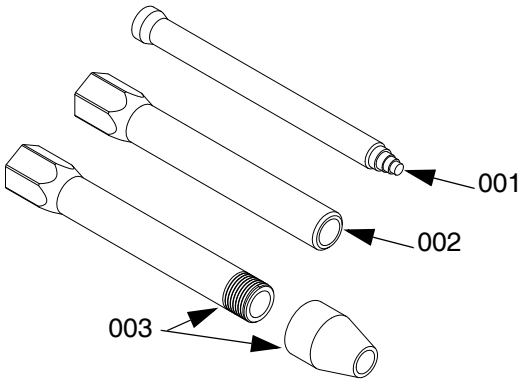

10 mm Mixer Elements

Ref	Part	Description
001	127160	MIXER, assy, 10mm x 12 element
	24T250	MIXER, assy, 10mm x 12 element - 25 count
	24T251	MIXER, assy, 10mm x 12 element - 50 count
002	16V841	SLEEVE, mixer, no front thread
003	24T035	SLEEVE, mixer, thread x 1/4 NPT outlet

1/2 in. Mixer Elements

Ref	Part	Description
001	512288	MIXER, assy, 1/2 x 24 element
	512289	MIXER, assy, 1/2 x 30 element
	512286	MIXER, assy, 1/2 x 36 element
002	16T001	SLEEVE, mixer, 24 element
	16T002	SLEEVE, mixer, 30 element
	16T003	SLEEVE, mixer, 36 element

Appendix A - DM Icons Overview

Setup Screen Icons

Icon	Description
	Return to Home Screen
	Left Navigation Navigates to the previous screen.
	Right Navigation Navigates to the next screen.
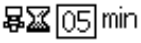	**Set Purge Timer** Allow the machine to remind the operator to take a shot before the chemical hardens in the gun. Timer starts once a dispense is complete.
	Lock Ratio Setpoint Lock the current ratio setpoint. Ratio setpoint will not be able to be adjusted when activated. Icon shown represents that it is not locked.
	Low Level Sensor Option Toggle if a low level sensor is installed or not installed on the machine. Icon shown represents not installed.
	Base (A) Pump
	Catalyst (B) Pump
	Weight System units are in grams
	Flow Meter Shows the calibration factor (K) after calibration has been performed.
	Start Calibration
	Confirmation

Icon	Description
	Calendar / Date Set the date format and current date.
	Time Set the current time in 24 hour format.
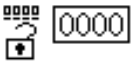	**Password** Set a password to lock system settings. Password “0000” disables the lock.
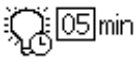	**Backlight Time** Set how long the screen will illuminate when idle before darkening. Entering “0” disables the timer.
	Audible Alarm Allow the machine to sound an alarm when an error occurs.
	Download Depth Set how many hours of data the system will download.
	Log Intervals Set the time interval that the system will record the machine status.
	Display Module
	Advanced Fluid Control Module
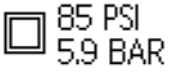	**Ultra-Lite Tri-core Mixer (P100 Model Only)** Toggle if an ultra-lite tri-core mixer is installed on a P100 machine.
	Ratio Alarm I- Standard tolerance
	Ratio Alarm II - Wider tolerance
	Ratio Alarm III - Widest tolerance

Run Screen Icons

Icon	Description
	Return to Home Screen
	Navigate to Purge/Prime Screen
	Navigate to Alarm Log Screen
	Navigate to Information Screen
	Calibration Check Changes the machine status to not okay in order to perform the calibration check procedure.
	Calibration Reset Clears all data and resets all samples to “0”.
	Purge Timer Counter Visual indicator to show the user the remaining idle time before another shot needs to be taken. The timer will begin to flash when expired.
	Base (A) Pump Select Icon will appear white when not activated, black when activated.
	Catalyst (B) Pump Select Icon will appear white when not activated, black when activated.
	Error Number / Event Number
	Date
	Time
	Error / Event Code
	Navigate to Totalizer Screen

Appendix B - DM Setup Screens Overview

If the DM is showing a Run screen, press to access the Setup screens, which have a black header. See the **DM Screen Navigation Diagram** on page 18.

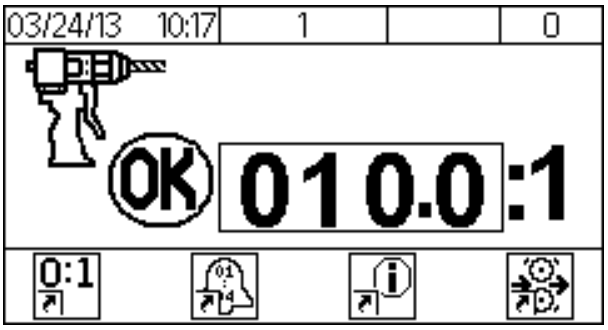

Screen 1

This screen allows you to set the purge timer, lock the ratio setpoint, toggle if low level sensors are installed, and toggle if an Ultra-lite with Tri-core mixer is installed on a P100 machine.

In addition, system token version 1.12.001 and above includes an alarm ratio sensitivity tolerance option. By default, the setting is “I” (standard for AGP since its release). From the drop down menu you can select “II” ( ) to set the tolerance for a wider sensitivity level or “III” (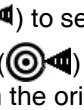) for the widest sensitivity level. If adjustment from the original software is not needed, leave the setting on .

S100 and U100 Models

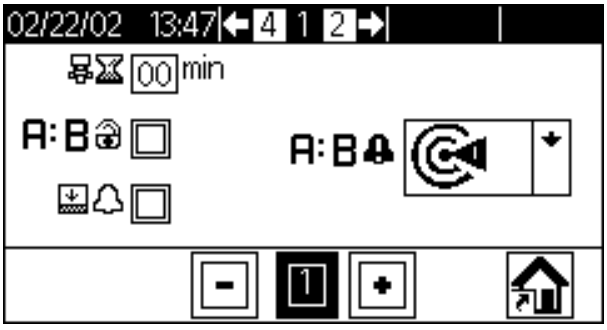

P100 Models

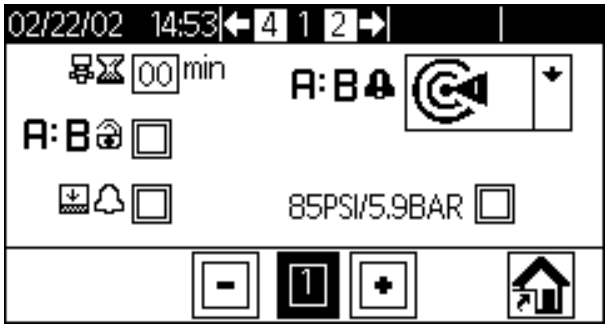

Screen 2

This screen allows you to calibrate the machine. See **Calibrate the machine.** page 40, for more details.

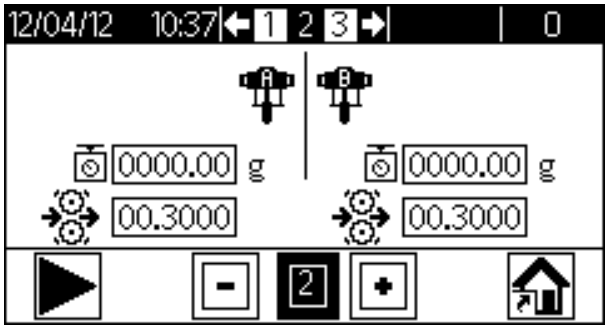

Screen 3

This screen allows you to format and set the current date and time, reset the password, adjust the backlight timer, and toggle sound/silent operation.

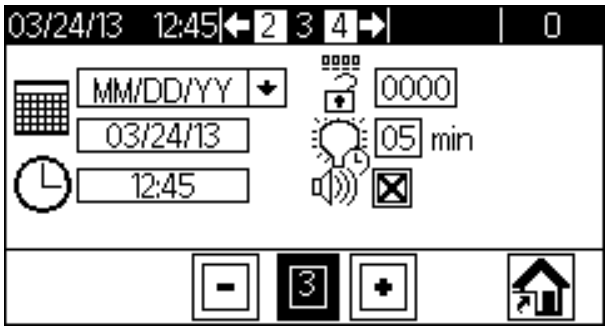

Screen 4

This screen is only displayed when the USB option is installed. The screen allows the user to enable downloading of USB logs, set log intervals, and set how many hours of data to download.

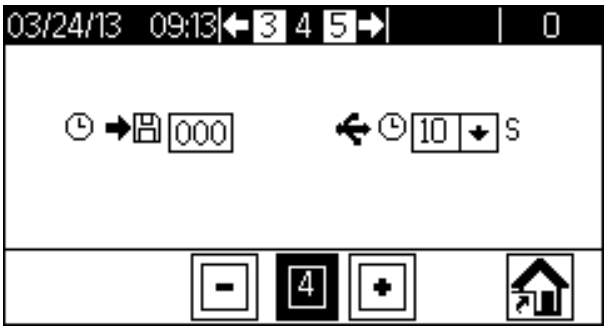

Screen 5

This screen is displayed as **Screen 4** when the USB option is not installed. The screen displays information of part numbers and software versions that are currently found within the system. The USB information is only displayed when the USB option is installed.

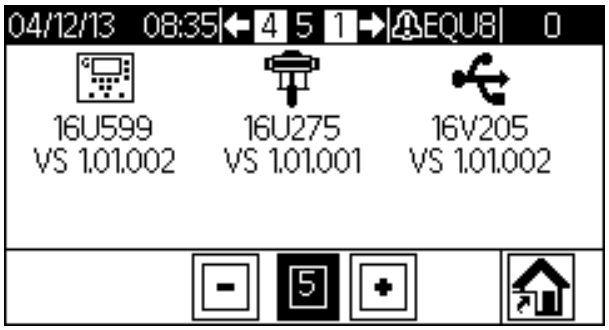

Appendix C - DM Run Screens Overview

If the DM is showing a Setup screen, press to access the Run screens. See the **DM Screen Navigation Diagram** on page 18.

NOTE: You can also press or to access the Run screens.

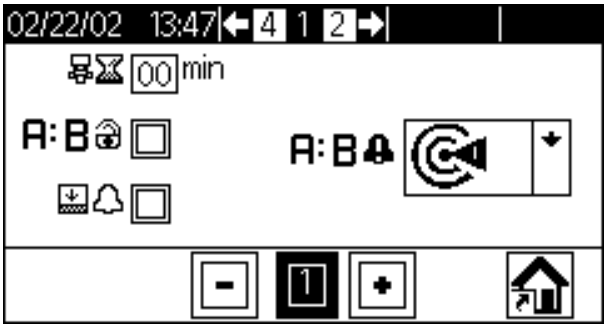

Home

This screen shows the current ratio and allows the user to access other screens.

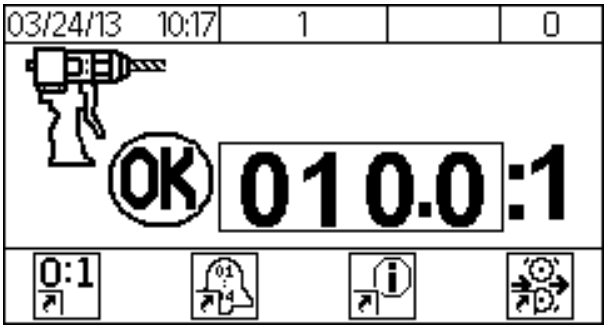

- Press or to increase or decrease the ratio.
- Press the corresponding to access another screen or to toggle an option.
- Shows the current state of the machine (okay/not okay).

Purge/Prime

This screen allows the pumps to be run independently.

NOTE: All machine alarms are disabled when this screen is displayed on the DM.

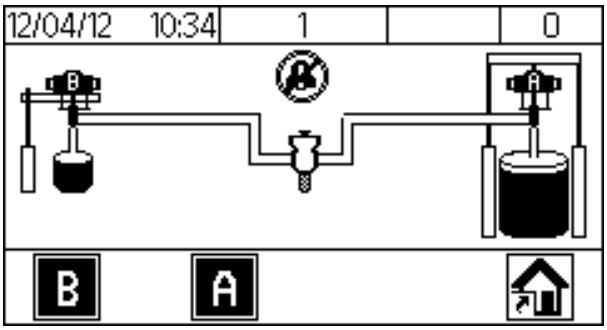

- Press the corresponding to deactivate or activate the desired pump for operation.

NOTE: The screen below shows only the catalyst (B) pump selected.

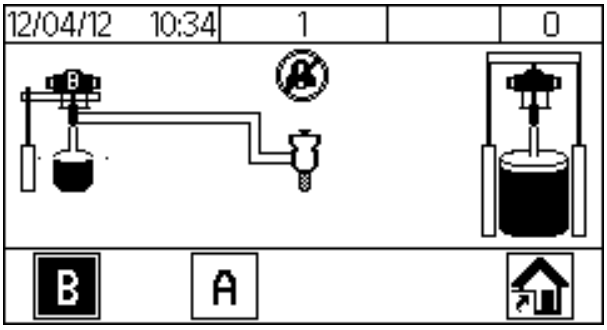

Alarm Log

This screen displays the last 70 errors that have occurred.

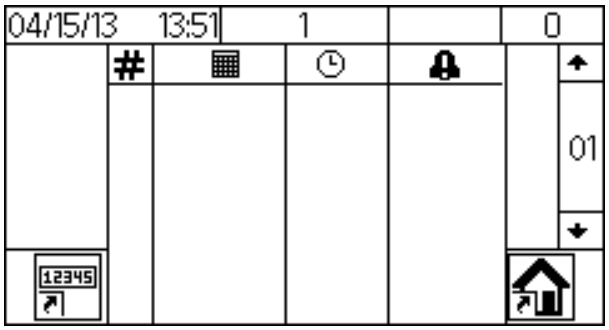

- Press or to show other errors.

Totalizer

This screen displays the total amount of material (in kilograms) dispensed for each pump.

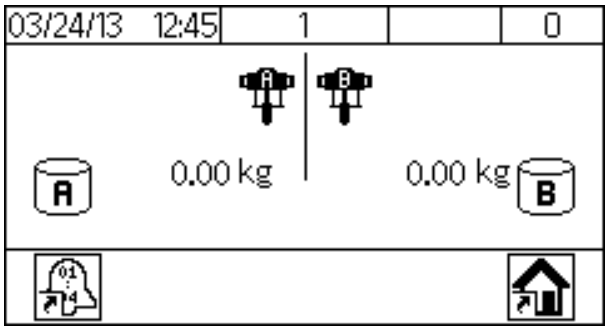

Information

This screen displays diagnostic information useful in troubleshooting.

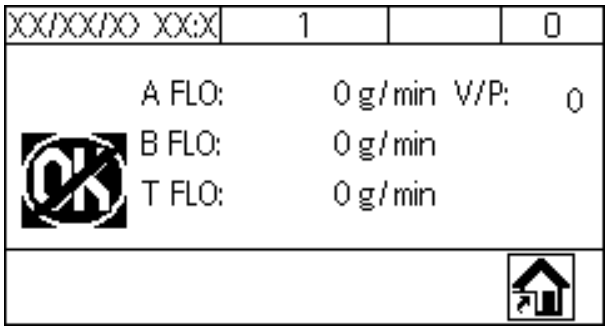

Calibration Check

This screen displays the ratio after a calibration check dispense.

NOTE: Production material cannot be dispensed from this screen.

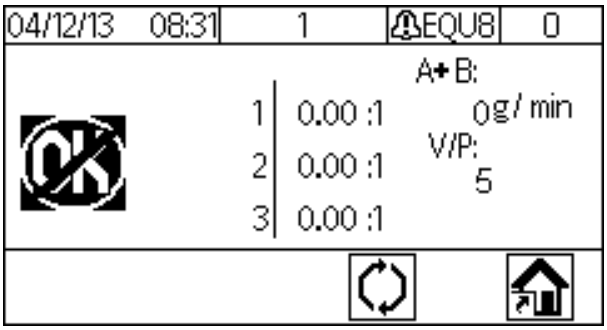

Appendix D - DM Error Codes

Error Code	Error Name	Error Type
0000-0	No Active Errors	Alarm
CA00-A	Unrecognized Error	Alarm
F6B3-A	Pump A Check Flow Meter	Alarm
F6A3-A	Pump B Check Flow Meter	Alarm
F5D0-A	Machine has not been calibrated	Alarm
F9D4-A	System Flow Rate is too Low	Alarm
F9D5-A	System Flow Rate is too High	Alarm
R4D0-A	High Ratio Alarm	Alarm
R1D0-A	Low Ratio Alarm	Alarm
L1C1-D	Check Pump A Drum	Deviation
EHD0-R	Purge Timer Expired	Record Only
E9D0-R	System not ok for dispense	Record Only
ELM0-R	System Power On	Record Only
EMM0-R	System Power Off	Record Only
ENB6-R	Begin Flowmeter Calibration, Pump A	Record Only
ENA6-R	Begin Flowmeter Calibration, Pump B	Record Only
ENB7-R	End Flowmeter Calibration, Pump A	Record Only
ENA7-R	End Flowmeter Calibration, Pump B	Record Only
ENB8-R	Abort Flowmeter Calibration, Pump A	Record Only
ENA8-R	Abort Flowmeter Calibration, Pump B	Record Only
EGC6-R	Enter Purge/Prime Screen	Record Only
EGB9-R	Purge On, Pump A	Record Only
EGBA-R	Purge Off, Pump A	Record Only
EGA9-R	Purge On, Pump B	Record Only
EGAA-R	Purge Off, Pump B	Record Only
EGC7-R	Exit Purge/Prime Screen	Record Only
ECCX-R	Ratio Changed	Record Only
EADX-R	Start Dispense	Record Only
EBDX-R	End Dispense	Record Only
CUCX-V	Duplicate Node Found	Advisory
CACX-A	FCM Missing	Alarm
CAUX-A	USB Disconnected	Alarm
ECB3-R	Pump A K-factor Changed	Record Only
ECA3-R	Pump B k-factor Changed	Record Only
ECDC-R	Gel Timer Changed	Record Only
ECFB-R	Pressure Transducer Installed	Record Only
EQU0-R	USB Logs Downloaded	Record Only
EQU0-D	No Configuration	Deviation
EQU8-D	Disk Removed Too Early	Deviation
R9CX-A	Insufficient Restriction / Unbalanced Pressures	Alarm

Schematics

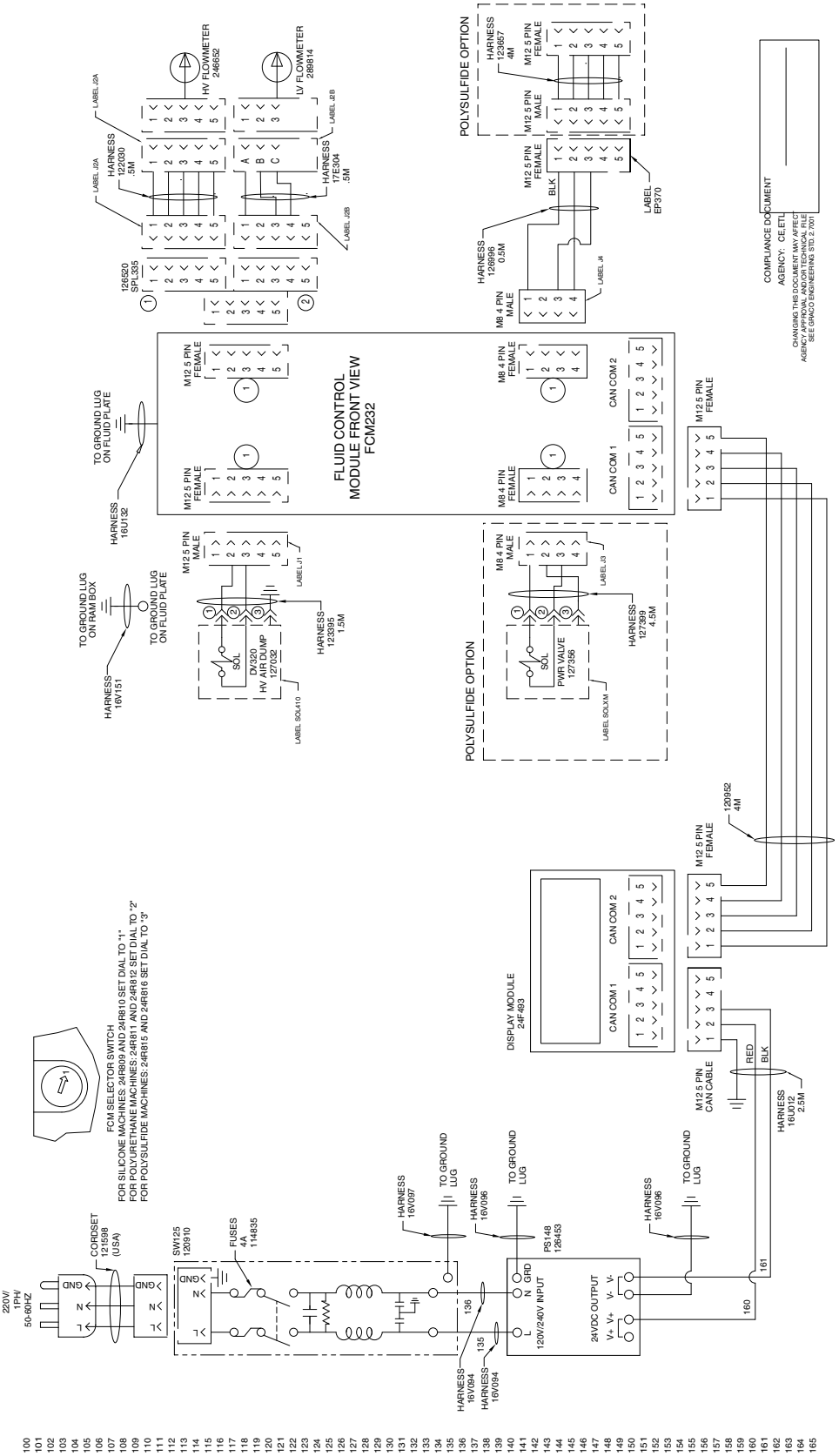

COMPLIANCE DOCUMENT
AGENCY: CE,ETL
CHANGING THIS DOCUMENT MAY AFFECT
AGENCY APPROVAL AND/OR TECHNICAL FILE
SEE GRACO ENGINEERING STD. 2.7001

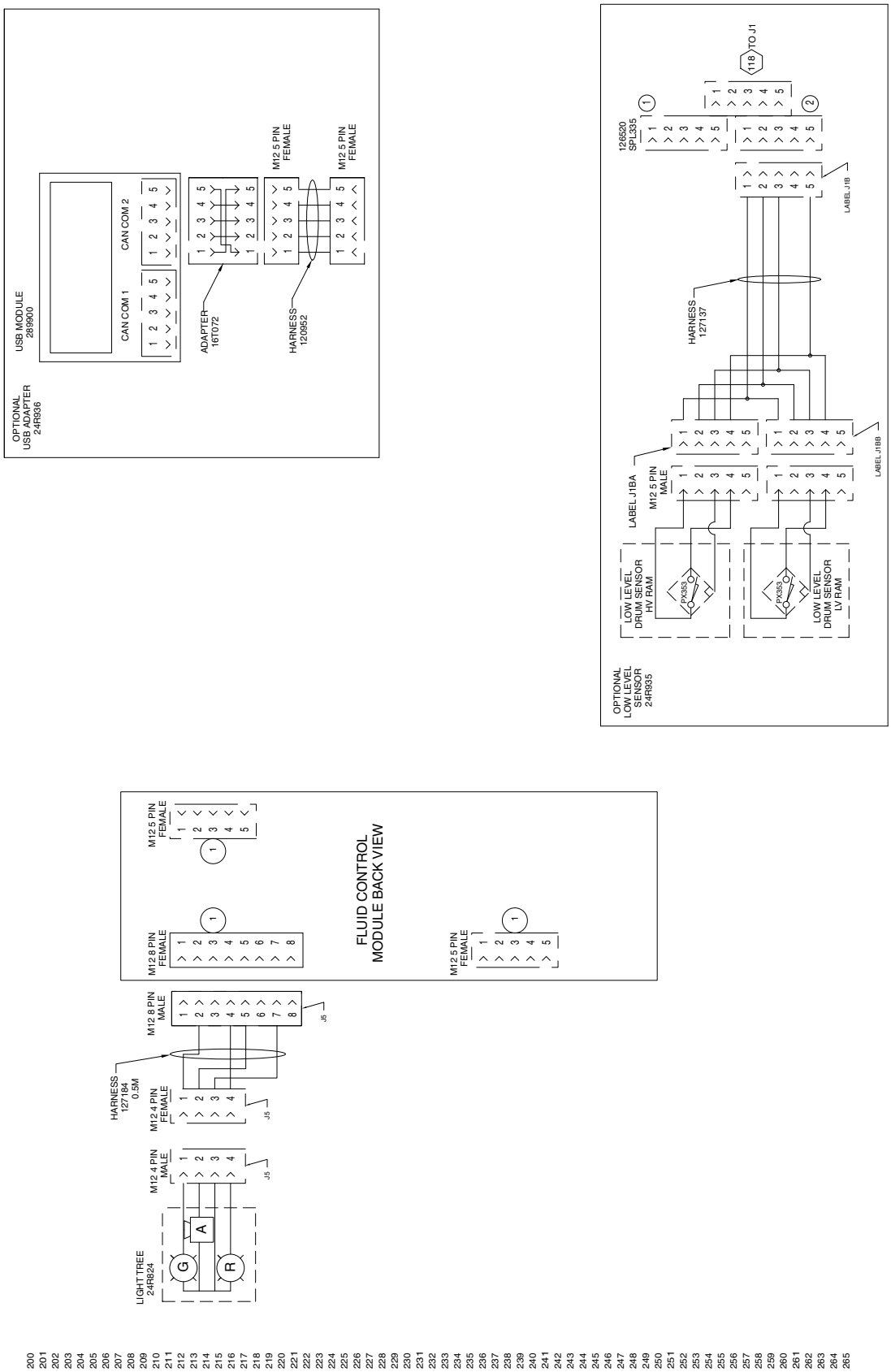
OPTIONAL
USB ADAPTER
24R936
USB MODULE
289900
CAN COM 1
CAN COM 2
ADAPTER
16T072
HARNESS
120952
M12 5 PIN
FEMALE
M12 5 PIN
FEMALE
OPTIONAL
LOW LEVEL
SENSOR
24R935
LOW LEVEL
DRUM SENSOR
HV RAM
LOW LEVEL
DRUM SENSOR
LV RAM
PX353
PX353
LABEL J1BA
LABEL J1BB
M12 5 PIN
MALE
HARNESS
127137
LABEL J1B
126520
SPL335
118
TO J1
FLUID CONTROL
MODULE BACK VIEW
M12 5 PIN
FEMALE
M12 8 PIN
FEMALE
M12 5 PIN
FEMALE
M12 5 PIN
FEMALE
M12 8 PIN
MALE
HARNESS
127184
0.5M
M12 4 PIN
FEMALE
M12 4 PIN
MALE
LIGHT TREE
24R824
J5
J5
J5
G
A
R

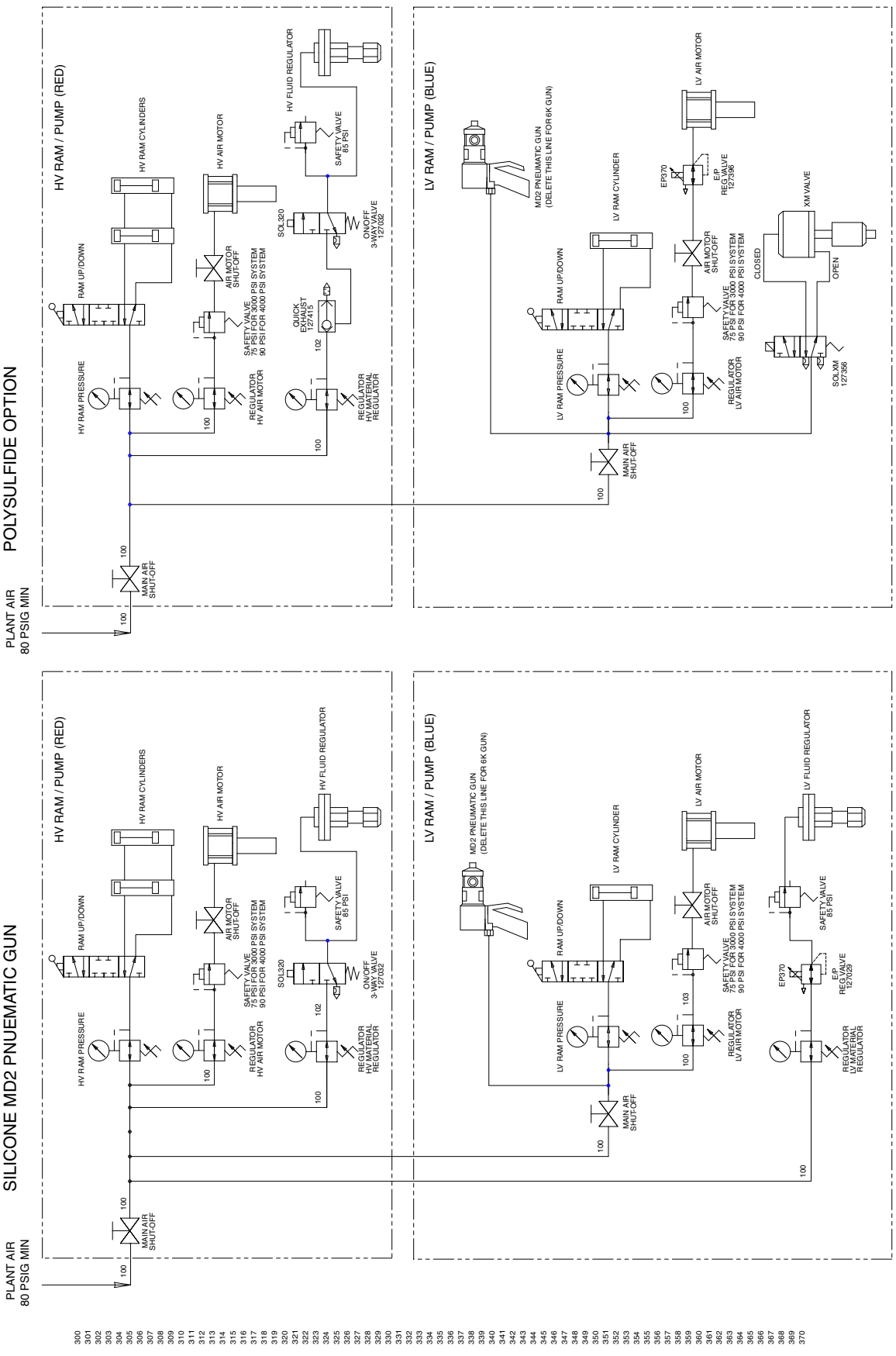
SILICONE MD2 PNUEMATIC GUN
POLYSULFIDE OPTION
PLANT AIR
80 PSIG MIN
HV RAM / PUMP (RED)
LV RAM / PUMP (BLUE)
MAIN AIR SHUT-OFF
RAM UP/DOWN
HV RAM CYLINDERS
HV AIR MOTOR
HV FLUID REGULATOR
HV RAM PRESSURE
AIR MOTOR SHUT-OFF
SAFETY VALVE 65 PSI
SAFETY VALVE 75 PSI FOR 3000 PSI SYSTEM 90 PSI FOR 4000 PSI SYSTEM
SOL320
ON/OFF 3-WAY VALVE 127032
QUICK EXHAUST 127415
REGULATOR HV AIR MOTOR
REGULATOR HV MATERIAL REGULATOR
MD2 PNEUMATIC GUN (DELETE THIS LINE FOR 6K GUN)
LV RAM CYLINDER
LV AIR MOTOR
LV RAM PRESSURE
EP370
E/P REG VALVE 127396
REGULATOR LV AIR MOTOR
XM VALVE
CLOSED
OPEN
SOL XM 127355
REGULATOR LV MATERIAL REGULATOR
E/P REG VALVE 127029

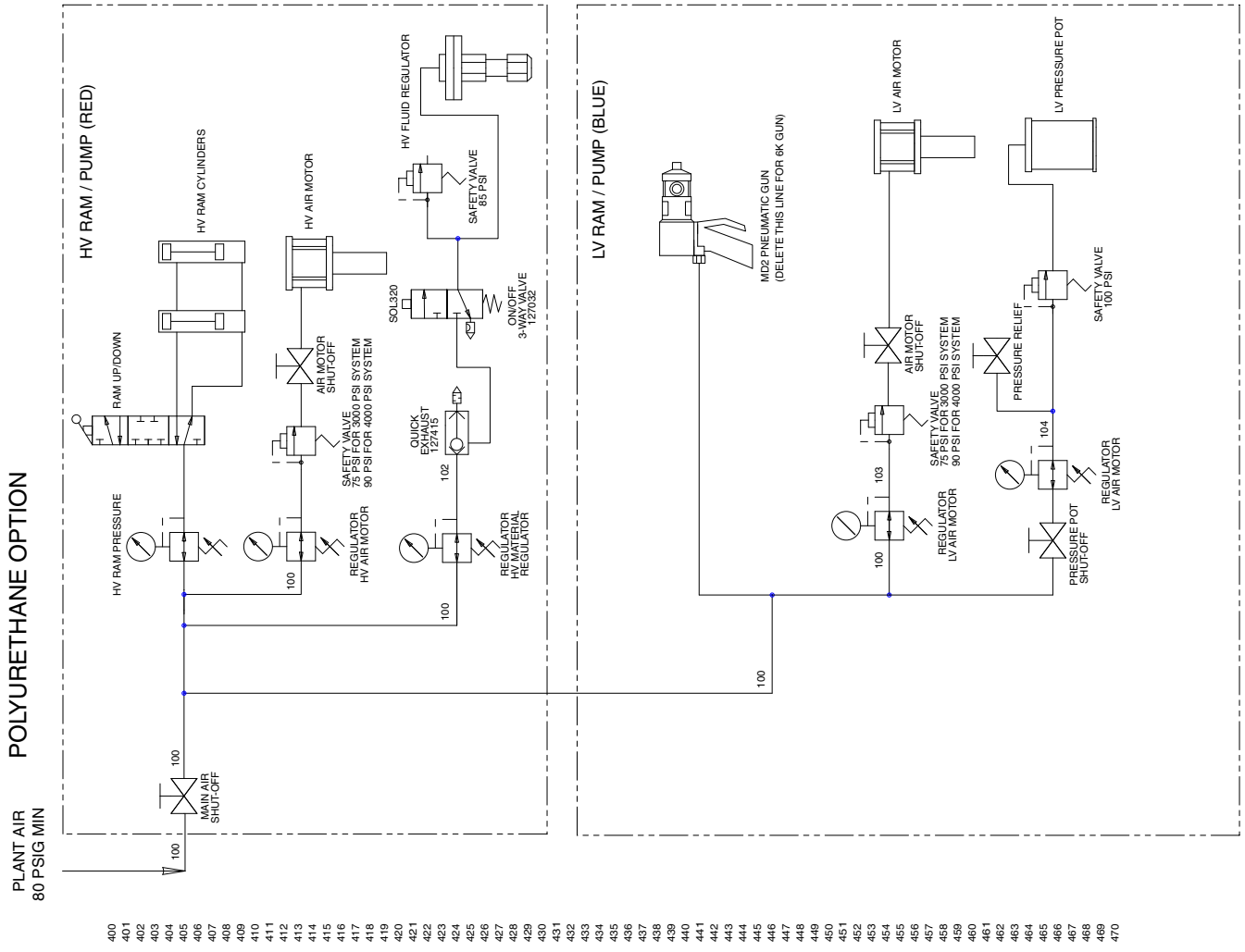
POLYURETHANE OPTION
PLANT AIR
80 PSIG MIN
HV RAM / PUMP (RED)
LV RAM / PUMP (BLUE)
MAIN AIR SHUT-OFF
HV RAM CYLINDERS
RAM UP/DOWN
HV RAM PRESSURE
HV AIR MOTOR
AIR MOTOR SHUT-OFF
SAFETY VALVE 75 PSI FOR 3000 PSI SYSTEM 90 PSI FOR 4000 PSI SYSTEM
REGULATOR HV AIR MOTOR
HV FLUID REGULATOR
SAFETY VALVE 85 PSI
SOL320
ON/OFF 3-WAY VALVE 127002
QUICK EXHAUST 127415
REGULATOR HV MATERIAL REGULATOR
MD2 PNEUMATIC GUN (DELETE THIS LINE FOR 6K GUN)
LV AIR MOTOR
AIR MOTOR SHUT-OFF
SAFETY VALVE 75 PSI FOR 3000 PSI SYSTEM 90 PSI FOR 4000 PSI SYSTEM
REGULATOR LV AIR MOTOR
LV PRESSURE POT
PRESSURE RELIEF
SAFETY VALVE 100 PSI
PRESSURE POT SHUT-OFF
REGULATOR LV AIR MOTOR
100
102
103
104

Dimensions

S100 55/5 Gal. (200/20 L) Shown

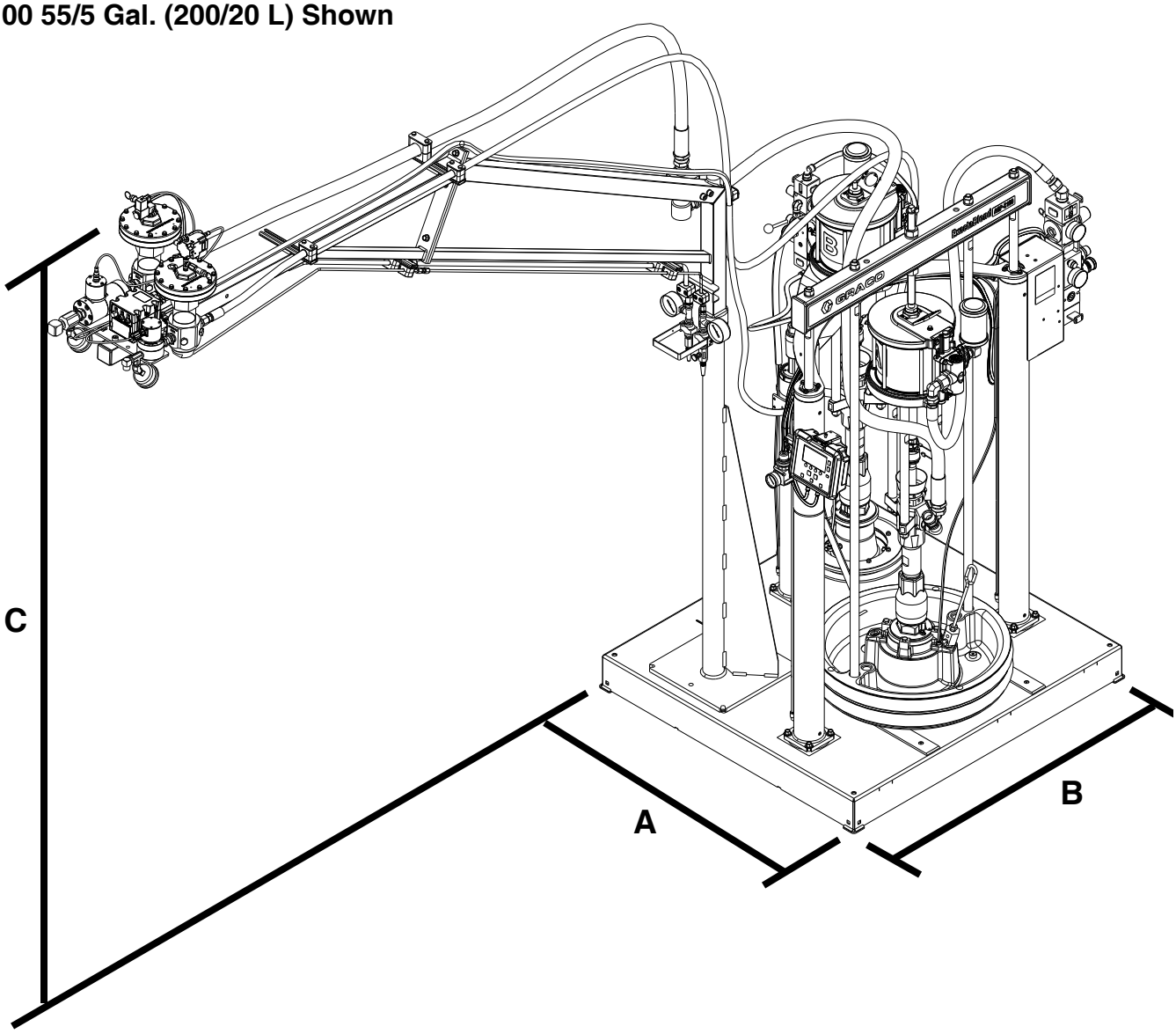

Dimension	US (ft)	Metric (m)
A (Length)	3.3	1.0
B (Width)	3.5	1.1
C (Height)	9.0 (with boom)	2.7
	5.3 (without boom)	1.6

S100 5/5 Gal. (20/20 L)

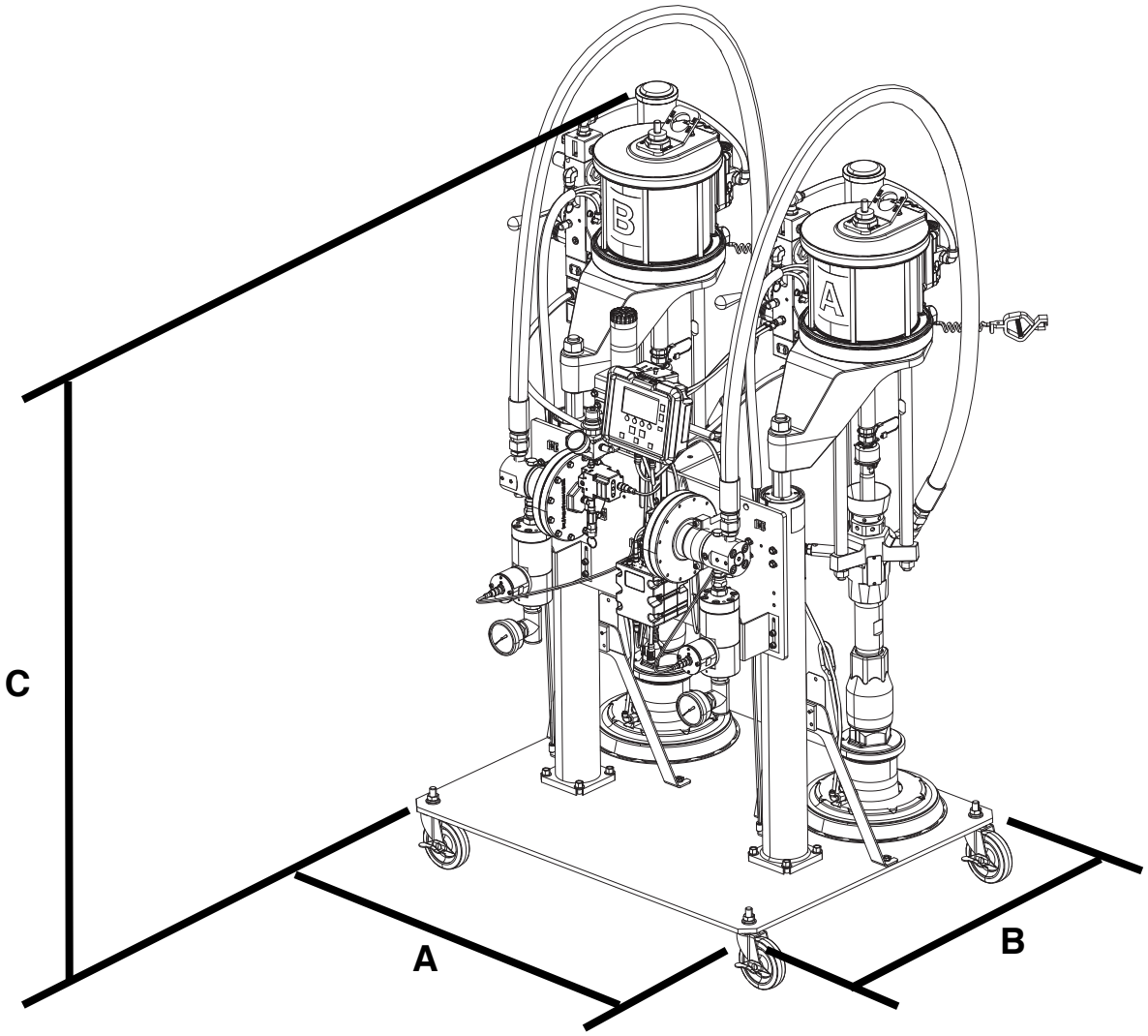

Dimension	US (ft)	Metric (m)
A (Length)	3.3	1.0
B (Width)	2.3	0.7
C (Height)	4.6	1.4

Technical Data

ExactaBlend AGP Advanced Glazing Proportioner		
	US	**Metric**
Maximum fluid working pressure : **MD2 or** **Ultra-lite with flexible hose mixer Installed**	3000 psi	21 MPa, 207 bar
Maximum fluid working pressure : **Ultra-lite with Tri-core mixer Installed**	4000 psi	28 MPa, 276 bar
Minimum flow rate 6:1 to 14:1 ratio (by weight)❖	1.10 lb/min	500 g/min
Minimum flow rate 1:1 ratio (by weight)❖	2.21 lb/min	1000 g/min
Maximum flow rate 1:1 to 14:1 ratio (by weight)❖	8.82 lb/min	4000 g/min
Incoming air pressure required*	80-100 psi	0.6-0.7 MPa, 6.0-7.0 bar
Maximum operating temperature	120° F	50° C
Voltage range	90-264 VAC 50/60 Hz 1 phase	
Maximum amperage	4	
Sound pressure**	82 dB(A)	
Wetted parts ★	Zinc-plated carbon steel, aluminum ram plate, nitrile rubber wipers, chrome, stainless steel, UHMW polyethylene, PTFE, nylon, Buna-N	
Inlet/Outlet Sizes		
Fluid outlet base	1/2 npt (f)	
Fluid outlet catalyst	1/4 npt (f)	
Air inlet size	3/4 npt (f)	
Weight		
S100 5 Gal./5 Gal. (20 L/20 L) Model	512 lb.	232 kg
All other models	865 lb.	392 kg
Notes		
* *Startup pressures and displacement per cycle may vary based on suction condition, discharge head, air pressure, and fluid type.*		
** *Sound pressure measured 3.3 feet (1 meter) from equipment.*		
★ *Refer to specific component manual for more details.*		
❖ *Flow Rate is dependent on the applicator, material viscosity, and material temperature.*		

NOTES:

Graco Standard Warranty

Graco warrants all equipment referenced in this document which is manufactured by Graco and bearing its name to be free from defects in material and workmanship on the date of sale to the original purchaser for use. With the exception of any special, extended, or limited warranty published by Graco, Graco will, for a period of twelve months from the date of sale, repair or replace any part of the equipment determined by Graco to be defective. This warranty applies only when the equipment is installed, operated and maintained in accordance with Graco's written recommendations.

This warranty does not cover, and Graco shall not be liable for general wear and tear, or any malfunction, damage or wear caused by faulty installation, misapplication, abrasion, corrosion, inadequate or improper maintenance, negligence, accident, tampering, or substitution of non-Graco component parts. Nor shall Graco be liable for malfunction, damage or wear caused by the incompatibility of Graco equipment with structures, accessories, equipment or materials not supplied by Graco, or the improper design, manufacture, installation, operation or maintenance of structures, accessories, equipment or materials not supplied by Graco.

This warranty is conditioned upon the prepaid return of the equipment claimed to be defective to an authorized Graco distributor for verification of the claimed defect. If the claimed defect is verified, Graco will repair or replace free of charge any defective parts. The equipment will be returned to the original purchaser transportation prepaid. If inspection of the equipment does not disclose any defect in material or workmanship, repairs will be made at a reasonable charge, which charges may include the costs of parts, labor, and transportation.

THIS WARRANTY IS EXCLUSIVE, AND IS IN LIEU OF ANY OTHER WARRANTIES, EXPRESS OR IMPLIED, INCLUDING BUT NOT LIMITED TO WARRANTY OF MERCHANTABILITY OR WARRANTY OF FITNESS FOR A PARTICULAR PURPOSE.

Graco's sole obligation and buyer's sole remedy for any breach of warranty shall be as set forth above. The buyer agrees that no other remedy (including, but not limited to, incidental or consequential damages for lost profits, lost sales, injury to person or property, or any other incidental or consequential loss) shall be available. Any action for breach of warranty must be brought within two (2) years of the date of sale.

GRACO MAKES NO WARRANTY, AND DISCLAIMS ALL IMPLIED WARRANTIES OF MERCHANTABILITY AND FITNESS FOR A PARTICULAR PURPOSE, IN CONNECTION WITH ACCESSORIES, EQUIPMENT, MATERIALS OR COMPONENTS SOLD BUT NOT MANUFACTURED BY GRACO. These items sold, but not manufactured by Graco (such as electric motors, switches, hose, etc.), are subject to the warranty, if any, of their manufacturer. Graco will provide purchaser with reasonable assistance in making any claim for breach of these warranties.

In no event will Graco be liable for indirect, incidental, special or consequential damages resulting from Graco supplying equipment hereunder, or the furnishing, performance, or use of any products or other goods sold hereto, whether due to a breach of contract, breach of warranty, the negligence of Graco, or otherwise.

FOR GRACO CANADA CUSTOMERS
The Parties acknowledge that they have required that the present document, as well as all documents, notices and legal proceedings entered into, given or instituted pursuant hereto or relating directly or indirectly hereto, be drawn up in English. Les parties reconnaissent avoir convenu que la rédaction du présente document sera en Anglais, ainsi que tous documents, avis et procédures judiciaires exécutés, donnés ou intentés, à la suite de ou en rapport, directement ou indirectement, avec les procédures concernées.

Graco Information

Sealant and Adhesive Dispensing Equipment

TO PLACE AN ORDER

DispenseRite

www.metermixdispense.com
866 967 4660

All written and visual data contained in this document reflects the latest product information available at the time of publication.
Graco reserves the right to make changes at any time without notice.

Original instructions. *This manual contains English. MM 3A1149*

Graco Headquarters: Minneapolis
International Offices: Belgium, China, Japan, Korea

GRACO INC. AND SUBSIDIARIES • P.O. BOX 1441 • MINNEAPOLIS MN 55440-1441 • USA
Copyright 2010, Graco Inc. All Graco manufacturing locations are registered to ISO 9001.
www.graco.com
Revision H, February 2017